Bellows pads
PJ series

			Connection type	Top port	Side port
Without connector With locking fitting **PS** ϕ6 ~ 50	⇒P253		Female screw (without connector)	PS–□–J–F	–
			Male screw (without connector)	PS–□–J–M	–
Pad with locking fitting **PJ □ K** ϕ6 ~ 80	⇒P255		Barb connector	PJTK	PJYK
Simple pad with spring fitting **PSS** Stroke(mm) ϕ6/8 3,5	⇒P258		Male screw (without connector)	PSS–□–PJG–□	–
Pad with spring fitting **NAPJ □ S** Stroke(mm) ϕ6/8 3,6 ϕ10/15 3,10,15 ϕ20 ~ 50 6,15,30 ϕ60 ~ 80 10,30,50	⇒P259		Female screw (without connector)	NAPJTS–□–□	NAPJYS–□–□
			Push–in connector	NAPJTS–□–□–O	NAPJYS–□–□–O
			Barb connector	NAPJTS–□–□–T	NAPJYS–□–□–T
Pad with spring fitting non–rotation type **NAPJ □ H** Stroke(mm) ϕ6 ~ 15 3,10,15 ϕ20 ~ 50 6,15,30	⇒P263		Female screw (without connector)	NAPJTH–□–□	NAPJYH–□–□
			Push–in connector	NAPJTH–□–□–O	NAPJYH–□–□–O
			Barb connector	NAPJTH–□–□–T	NAPJYH–□–□–T
Maintenance parts			Locking fitting: Male screw, Female screw, Barb connector	Reference each page	Reference each page
Fitting	⇒P253, 255, 258, 259, 263		Spring type Fitting: Male screw, Push–in connector, Barb connector	Reference each page	Reference each page
Setting screw	⇒P336		Setting screw	TN–PF	
Pad	⇒P267		pad	PJG	

Pad material table

●: Standard

	Material	Indentification	Symble	Round pad 4	6	8	10	15	20	25	30	35	40	50	60	70	80
Standard	Nitrile	Black	N	●	●	●	●	●	●	●	●	●	●	●	●	●	●
	Silicone	Transparent white	S	●	●	●	●	●	●	●	●	●	●	●	●	●	●
	Urethane	Blue	U	●	●	●	●	●	●	●	●	●	●	●	●	●	●
	Fluorine	Black with white dot	F	●	●	●	●	●	●	●	●	●	●	●	●	●	●
	Conductive nitrile	Black with blue dot	NE	●	●	●	●	●	●	●	●	●	●	●	●	●	●
	Conductive silicone	Black with red dot	SE	●	●	●	●	●	●	●	●	●	●	●	●	●	●

Simple pad/PS

How to order

① ② ③

PS – 6 – J – M – N

① Pad diameter (mm)

6	ϕ6	20	ϕ20
8	ϕ8	30	ϕ30
10	ϕ10	40	ϕ40
15	ϕ15	50	ϕ50

Note) For diameter pad 10 to 50mm, rubber part only cannot be changed. Please order with its fitting.

② Setting screw type

M	Male screw
F	Female screw

③ Pad rubber material

N	NBR(Nitrile rubber)
S	Silicone rubber
U	Urethane rubber
F	Fluorine rubber
NE	Conductive NBR(Nitrile rubber)
SE	Conductive Silicone rubber

Note) Please consult with us for other material.

Pad standard specifications

Symbol	Material	Hardness(Hs)	Ambient temperature	Color	Volume resistivity Note 1・2
N	NBR(Nitrile rubber)	A55/S	–26 ~ 120℃	Black	–
S	Silicone rubber	A55/S	–60 ~ 250℃	White	–
U	Urethane rubber	A55/S	–20 ~ 75℃	Blue	–
F	Fluorine rubber	A70/S	–10 ~ 230℃	Black with white dot	–
NE	Conductive NBR(Nitrile rubber)	A70/S	–26 ~ 120℃	Black with blue dot	10^2 ~ 10^3 Ω・cm
SE	Conductive Silicone rubber	A55/S	–60 ~ 250℃	Black with red dot	10^2 ~ 10^4 Ω・cm

Note1) Volume resistivity shows conductivity, resistance value is per cm^3.
Note2) It is the measured value of in our designated test piece.

Applicable fitting table

Setting screw	How to order	Round pad							
		6	8	10	15	20	30	40	50
Male screw	TN–PS–10–M5	○	○						
Female screw	TN–PS–10–M5F	○	○						

Note) For pad diameter 10 to 50mm, rubber part only cannot be changed. Please order with its fitting.

Dimensions

Unit : mm <inch>

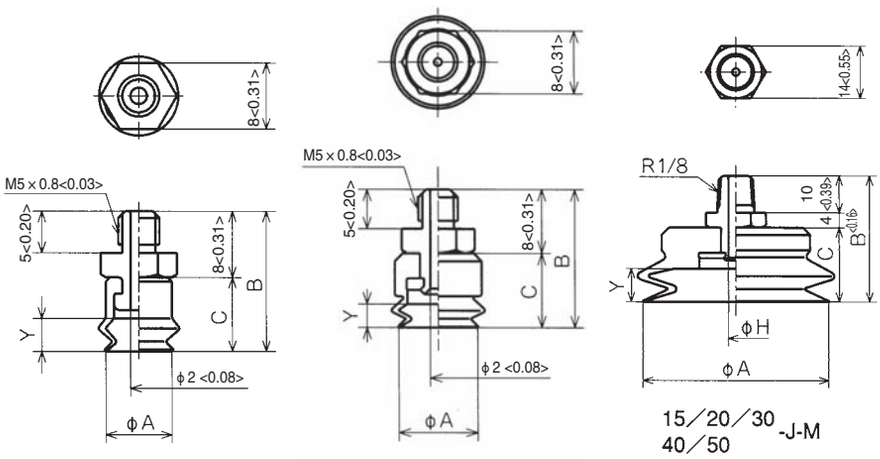

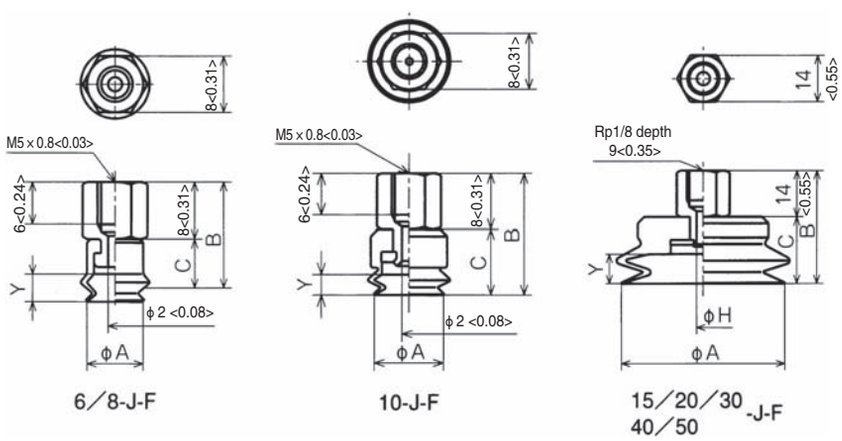

mm

PS	A	B	C	H	Y	Mass(g)
PS–6–J–M	6	17	9		4.2	1.5
PS–8–J–M	8	17	9		4	1.5
PS–10–J–M	10	17.5	9.5		3	7
PS–15–J–M	15	25	11	2	3.3	8
PS–20–J–M	20	27	13	2	5.5	9
PS–30–J–M	30	32	18	3	7	14
PS–40–J–M	40	32	18	3	7.2	16
PS–50–J–M	50	34	20	4	9	26
PS–6–J–F	6	17	9		4.2	2.5
PS–8–J–F	8	17	9		4	2.5
PS–10–J–F	10	17.5	9.5		3	8
PS–15–J–F	15	25	11	2	3.3	8
PS–20–J–F	20	27	13	2	5.5	10
PS–30–J–F	30	32	18	3	7	15
PS–40–J–F	40	32	18	3	7.2	17
PS–50–J–F	50	34	20	4	9	27

inch

PS	A	B	C	H	Y	Mass(g)
PS–6–J–M	0.24	0.67	0.35		0.17	1.5
PS–8–J–M	0.31	0.67	0.35		0.16	1.5
PS–10–J–M	0.39	0.69	0.37		0.12	7
PS–15–J–M	0.59	0.98	0.43	0.08	0.13	8
PS–20–J–M	0.79	1.06	0.51	0.08	0.22	9
PS–30–J–M	1.18	1.26	0.71	0.12	0.28	14
PS–40–J–M	1.57	1.26	0.71	0.12	0.28	16
PS–50–J–M	1.97	1.34	0.79	0.16	0.35	26
PS–6–J–F	0.24	0.67	0.35		0.17	2.5
PS–8–J–F	0.31	0.67	0.35		0.16	2.5
PS–10–J–F	0.39	0.69	0.37		0.12	8
PS–15–J–F	0.59	0.98	0.43	0.08	0.13	8
PS–20–J–F	0.79	1.06	0.51	0.08	0.22	10
PS–30–J–F	1.18	1.26	0.71	0.12	0.28	15
PS–40–J–F	1.57	1.26	0.71	0.12	0.28	17
PS–50–J–F	1.97	1.34	0.79	0.16	0.35	27

Pad with locking fitting / PJTK · PJYK

How to order

① ② ③

PJ [T] K – [6] – [N]

① Vacuum port

T	Top port
Y	Side port

② Pad diameter (mm)

6	ϕ6	35	ϕ35
8	ϕ8	40	ϕ40
10	ϕ10	50	ϕ50
15	ϕ15	60	ϕ60
20	ϕ20	70	ϕ70
25	ϕ25	80	ϕ80
30	ϕ30		

③ Pad rubber material

N	NBR(Nitrile rubber)
S	Silicone rubber
U	Urethane rubber
F	Fluorine rubber
NE	Conductive NBR(Nitrile rubber)
SE	Conductive Silicone rubber

Note) Please consult with us for other material.

Fitting specifications

Description			ϕ6/8		ϕ10 ~ 50		ϕ60 ~ 80	
Vacuum port type			Top port	Side port	Top port	Side port	Top port	Side port
Connection type	Without connector		×	×	×	×	Rc1/8	Rc1/8
	Barb connector	ϕ4 × 2.5	×	×	×	×	×	×
		ϕ6 × 4	○	○ (M5)	○ (M5)	○ (M5)	×	×
Fitting attachment type			Male screw	Female screw	Male screw	Female screw	Male screw	Female screw

Note) ○ means that fitting and connector cannot be disassembled.

Pad standard specifications

Symbol	Material	Hardness(Hs)	Ambient temperature	Color	Volume resistivity Note 1・2
N	NBR(Nitrile rubber)	A55/S	–26 ~ 120℃	Black	–
S	Silicone rubber	A55/S	–60 ~ 250℃	White	–
U	Urethane rubber	A55/S	–20 ~ 75℃	Blue	–
F	Fluorine rubber	A70/S	–10 ~ 230℃	Black with white dot	–
NE	Conductive NBR(Nitrile rubber)	A70/S	–26 ~ 120℃	Black with blue dot	10^2 ~ 10^3 Ω・cm
SE	Conductive Silicone rubber	A55/S	–60 ~ 250℃	Black with red dot	10^2 ~ 10^4 Ω・cm

Note1) Volume resistivity shows conductivity, resistance value is per cm^3.
Note2) It is the measured value of in our designated test piece.

Applicable fitting table

		How to order	Round pad												
			6	8	10	15	20	25	30	35	40	50	60	70	80
Fitting	Top port	PFTK–5A–K	○	○											
		PFTK–15–K			○	○	○	○							
		PFTK–25–K							○	○	○				
		PFTK–50–K										○			
		PFTK–60–K											○	○	○
	Side port	PFYK–5A–K	○	○											
		PFYK–15–K			○	○	○	○							
		PFYK–25–K							○	○	○				
		PFYK–50–K										○			
		PFYK–60–K											○	○	○
Setting screw		TN–PF–15–M5			○	○									
		TN–PF–20–M5					○	○							
		TN–PF–25–M6							○	○	○				
		TN–PF–50–M8										○			

Note 1) Please attach directly to the fitting, pads with diameter from ϕ6 to 8mm.
Note 2) Please attach to the fitting, pads with diameter from ϕ10 to 50mm by using a female thread screw.
Note 3) For pad with diameter from 60mm to 80mm, please screw the pad directly to the fitting.

Dimensions

Unit : mm <inch>

PJTK

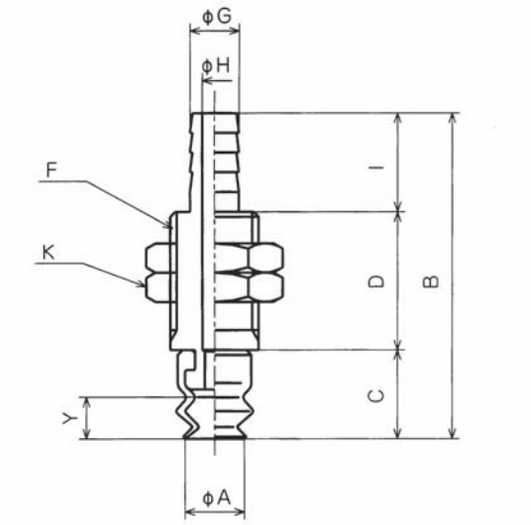

PJTK-6／8

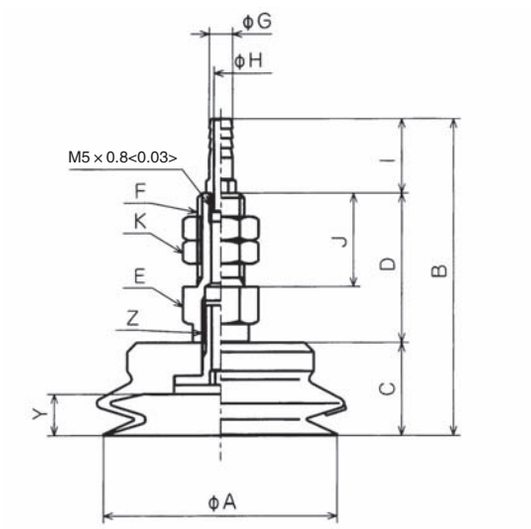

PJTK-10／15／20／25／30／35／40／50

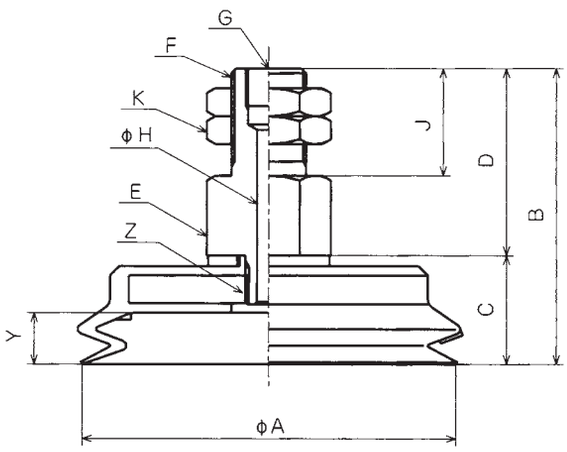

PJTK-60／70／80

mm

PJTK	A	B	C	D	E	F	G	H	I	J	K	Y	Z	Mass(g)
PJTK–6	6	33	9	14		M9	5	2.5	10		12H	4.2		11
PJTK–8	8	33	9	14		M9	5	2.5	10		12H	4.2		11
PJTK–10	10	42.5	9.5	22	10H	M8	5	3	11	15	10H	3	M5 × 0.8	14
PJTK–15	15	44	11	22	10H	M8	5	3	11	15	10H	4.5	M5 × 0.8	15
PJTK–20	20	46	13	22	10H	M8	5	3	11	15	10H	5.5	M5 × 0.8	17
PJTK–25	25	48.5	15.5	22	10H	M8	5	3	11	15	10H	6.5	M5 × 0.8	19
PJTK–30	30	61	18	32	14H	M10	5	3	11	20	14H	8	M6 × 1.0	42
PJTK–35	35	61	18	32	14H	M10	5	3	11	20	14H	8	M6 × 1.0	44
PJTK–40	40	61	18	32	14H	M10	5	3	11	20	14H	8	M6 × 1.0	44
PJTK–50	50	63	20	32	14H	M10	5	3	11	20	14H	9	M8 × 1.25	58
PJTK–60	60	62.5	22.5	40	21H	M16 × 1.5	Rc1/8	5		23	21H	10	M10 × 1.25	144
PJTK–70	70	63.5	23.5	40	21H	M16 × 1.5	Rc1/8	5		23	21H	11	M10 × 1.25	163
PJTK–80	80	63.5	23.5	40	21H	M16 × 1.5	Rc1/8	5		23	21H	11	M10 × 1.25	190

inch

PJTK	A	B	C	D	E	F	G	H	I	J	K	Y	Z	Mass(g)
PJTK–6	0.24	1.3	0.35	0.55		M9	0.2	0.1	0.39		0.47H	0.17		11
PJTK–8	0.31	1.3	0.35	0.55		M9	0.2	0.1	0.39		0.47H	0.17		11
PJTK–10	0.39	1.67	0.37	0.87	0.39H	M8	0.2	0.12	0.43	0.59	0.39H	0.12	M5 × 0.03	14
PJTK–15	0.59	1.73	0.43	0.87	0.39H	M8	0.2	0.12	0.43	0.59	0.39H	0.18	M5 × 0.03	15
PJTK–20	0.79	1.81	0.51	0.87	0.39H	M8	0.2	0.12	0.43	0.59	0.39H	0.22	M5 × 0.03	17
PJTK–25	0.98	1.91	0.61	0.87	0.39H	M8	0.2	0.12	0.43	0.59	0.39H	0.26	M5 × 0.03	19
PJTK–30	1.18	2.4	0.71	1.26	0.55H	M10	0.2	0.12	0.43	0.79	0.55H	0.31	M6 × 0.04	42
PJTK–35	1.38	2.4	0.71	1.26	0.55H	M10	0.2	0.12	0.43	0.79	0.55H	0.31	M6 × 0.04	44
PJTK–40	1.57	2.4	0.71	1.26	0.55H	M10	0.2	0.12	0.43	0.79	0.55H	0.31	M6 × 0.04	44
PJTK–50	1.97	2.48	0.79	1.26	0.55H	M10	0.2	0.12	0.43	0.79	0.55H	0.35	M8 × 0.05	58
PJTK–60	2.36	2.46	0.89	1.57	0.83H	M16 × 0.06	Rc1/8	0.2		0.91	0.83H	0.39	M10 × 0.05	144
PJTK–70	2.76	2.5	0.93	1.57	0.83H	M16 × 0.06	Rc1/8	0.2		0.91	0.83H	0.43	M10 × 0.05	163
PJTK–80	3.15	2.5	0.93	1.57	0.83H	M16 × 0.06	Rc1/8	0.2		0.91	0.83H	0.43	M10 × 0.05	190

Dimensions

Unit : mm <inch>

PJYK

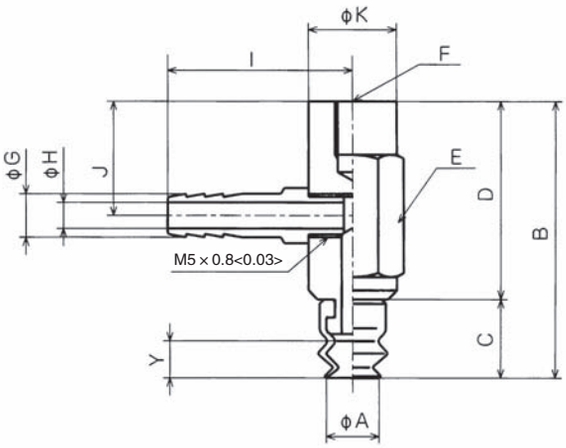

PJYK-6／8

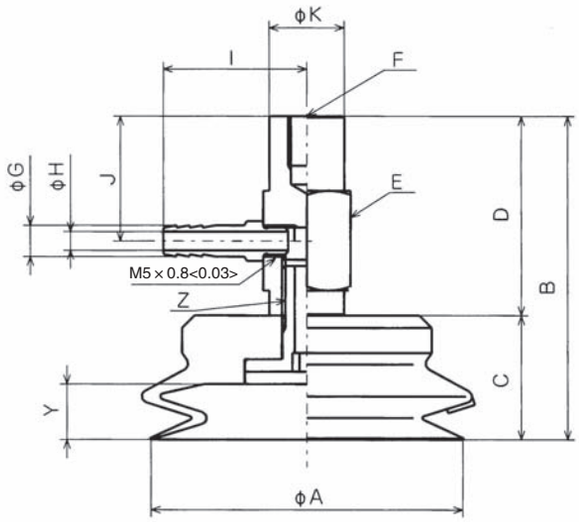

PJYK-10／15／20／25／30／35／40／50

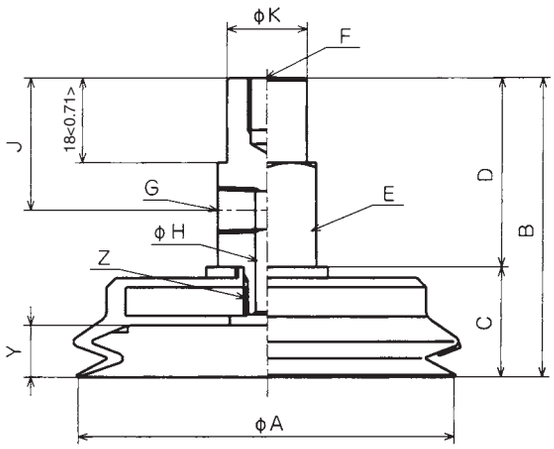

PJYK-60／70／80

mm

PJYK	A	B	C	D	E	F	G	H	I	J	K	Y	Z	Mass(g)
PJYK–6	6	31.5	9	22.5	10H	M4 × 0.7	5	2.5	16	13	10	4.2		16
PJYK–8	8	31.5	9	22.5	10H	M4 × 0.7	5	2.5	16	13	10	4.2		16
PJYK–10	10	31.5	9.5	22	10H	M4 depth 6	5	3	16	14	10	3	M5 × 0.8	17
PJYK–15	15	33	11	22	10H	M4 depth 6	5	3	16	14	10	4.5	M5 × 0.8	18
PJYK–20	20	35	13	22	10H	M4 depth 6	5	3	16	14	10	5.5	M5 × 0.8	20
PJYK–25	25	37.5	15.5	22	10H	M4 depth 6	5	3	16	14	10	6.5	M5 × 0.8	22
PJYK–30	30	50	18	32	14H	M6 depth 8	5	3	18	20	12	8	M6 × 1.0	46
PJYK–35	35	50	18	32	14H	M6 depth 8	5	3	18	20	12	8	M6 × 1.0	48
PJYK–40	40	50	18	32	14H	M6 depth 8	5	3	18	20	12	8	M6 × 1.0	48
PJYK–50	50	52	20	32	14H	M6 depth 8	5	3	18	20	12	9	M8 × 1.25	62
PJYK–60	60	62.5	22.5	40	21H	M8 depth 11	Rc1/8	5		28	17	10	M10 × 1.25	139
PJYK–70	70	63.5	23.5	40	21H	M8 depth 11	Rc1/8	5		28	17	11	M10 × 1.25	158
PJYK–80	80	63.5	23.5	40	21H	M8 depth 11	Rc1/8	5		28	17	11	M10 × 1.25	185

inch

PJYK	A	B	C	D	E	F	G	H	I	J	K	Y	Z	Mass(g)
PJYK–6	0.24	1.24	0.35	0.89	0.39H	M4 × 0.03	0.2	0.1	0.63	0.51	0.39	0.17		16
PJYK–8	0.31	1.24	0.35	0.89	0.39H	M4 × 0.03	0.2	0.1	0.63	0.51	0.39	0.17		16
PJYK–10	0.39	1.24	0.37	0.87	0.39H	M4 depth 0.24	0.2	0.12	0.63	0.55	0.39	0.12	M5 × 0.03	17
PJYK–15	0.59	1.3	0.43	0.87	0.39H	M4 depth 0.24	0.2	0.12	0.63	0.55	0.39	0.18	M5 × 0.03	18
PJYK–20	0.79	1.38	0.51	0.87	0.39H	M4 depth 0.24	0.2	0.12	0.63	0.55	0.39	0.22	M5 × 0.03	20
PJYK–25	0.98	1.48	0.61	0.87	0.39H	M4 depth 0.24	0.2	0.12	0.63	0.55	0.39	0.26	M5 × 0.03	22
PJYK–30	1.18	1.97	0.71	1.26	0.55H	M6 depth 0.31	0.2	0.12	0.71	0.79	0.47	0.31	M6 × 0.04	46
PJYK–35	1.38	1.97	0.71	1.26	0.55H	M6 depth 0.31	0.2	0.12	0.71	0.79	0.47	0.31	M6 × 0.04	48
PJYK–40	1.57	1.97	0.71	1.26	0.55H	M6 depth 0.31	0.2	0.12	0.71	0.79	0.47	0.31	M6 × 0.04	48
PJYK–50	1.97	2.05	0.79	1.26	0.55H	M6 depth 0.31	0.2	0.12	0.71	0.79	0.47	0.35	M8 × 0.05	62
PJYK–60	2.36	2.46	0.89	1.57	0.83H	M8 depth 0.43	Rc1/8	0.2		1.1	0.67	0.39	M10 × 0.05	139
PJYK–70	2.76	2.5	0.93	1.57	0.83H	M8 depth 0.43	Rc1/8	0.2		1.1	0.67	0.43	M10 × 0.05	158
PJYK–80	3.15	2.5	0.93	1.57	0.83H	M8 depth 0.43	Rc1/8	0.2		1.1	0.67	0.43	M10 × 0.05	185

Simple pad with spring fitting / PSS

How to order

① ② ③

PSS – L3 – PJG – 6 – N

① Stroke

L3	3mm Stroke
L5	5mm Stroke

② Pad diameter (mm)

6	ϕ6
8	ϕ8

③ Pad rubber material

N	NBR(Nitrile rubber)
S	Silicone rubber
U	Urethane rubber
F	Fluorine rubber
NE	Conductive NBR(Nitrile rubber)
SE	Conductive Silicone rubber

Note) Please consult with us for other material.

Pad standard specifications

Symbol	Material	Hardness(Hs)	Ambient temperature	Color	Volume resistivity Note 1・2
N	NBR(Nitrile rubber)	A55/S	–26 ~ 120℃	Black	–
S	Silicone rubber	A55/S	–60 ~ 250℃	White	–
U	Urethane rubber	A55/S	–20 ~ 75℃	Blue	–
F	Fluorine rubber	A70/S	–10 ~ 230℃	Black with white dot	–
NE	Conductive NBR(Nitrile rubber)	A70/S	–26 ~ 120℃	Black with blue dot	10^2 ~ 10^3 Ω・cm
SE	Conductive Silicone rubber	A55/S	–60 ~ 250℃	Black with red dot	10^2 ~ 10^4 Ω・cm

Note1) Volume resistivity shows conductivity, resistance value is per cm^3.
Note2) It is the measured value of in our designated test piece.

Applicable fitting table

	How to order	Round pad 6	Round pad 8
Fitting	PSS–L3	○	○
	PSS–L5	○	○

Note) Pad is attached directly to the fitting.

Dimensions

Unit : mm <inch>

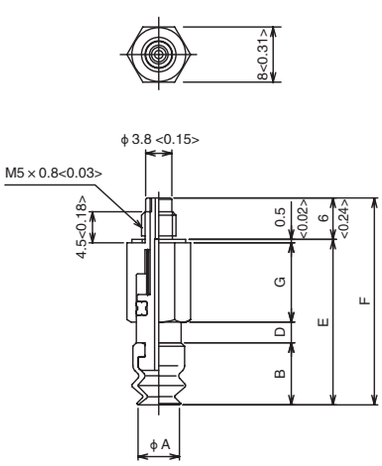

mm

PSS	A	B	C	D	E	F	G	F^1	F^2	Mass(g)
PSS–L3–PJG–6	6	9		3	24	30	11.5	1.5	2.3	6
PSS–L3–PJG–8	8	9		3	24	30	11.5	1.5	2.3	6
PSS–L5–PJG–6	6	9		5	28	34	13.5	1.5	2.3	7
PSS–L5–PJG–8	8	9		5	28	34	13.5	1.5	2.3	7

inch

PSS	A	B	C	D	E	F	G	F^1	F^2	Mass(g)
PSS–L3–PJG–6	0.24	0.35		0.12	0.94	1.18	0.45	1.5	2.3	6
PSS–L3–PJG–8	0.31	0.35		0.12	0.94	1.18	0.45	1.5	2.3	6
PSS–L5–PJG–6	0.24	0.35		0.2	1.1	1.34	0.53	1.5	2.3	7
PSS–L5–PJG–8	0.31	0.35		0.2	1.1	1.34	0.53	1.5	2.3	7

Note) Symbol F^1 in the table shows a spring load (N) at 0 stroke, and F^2 at full stroke.
In the terms of structure, when the works is being absorbed, the stroke will rise.

Pad with spring fitting / NAPJTS・YS

How to order

① ② ③ ④

NAPJ [T] S – [6 – 3] – [N] – [T]

① Vacuum port

T	Top port
Y	Side port

② Pad diameter – stroke (mm)

6–3	ϕ6–3	35–6	ϕ35–6
6–6	ϕ6–6	35–15	ϕ35–15
8–3	ϕ8–3	35–30	ϕ35–30
8–6	ϕ8–6	40–6	ϕ40–6
10–3	ϕ10–3	40–15	ϕ40–15
10–10	ϕ10–10	40–30	ϕ40–30
10–15	ϕ10–15	50–6	ϕ50–6
15–3	ϕ15–3	50–15	ϕ50–15
15–10	ϕ15–10	50–30	ϕ50–30
15–15	ϕ15–15	60–10	ϕ60–10
20–6	ϕ20–6	60–30	ϕ60–30
20–15	ϕ20–15	60–50	ϕ60–50
20–30	ϕ20–30	70–10	ϕ70–10
25–6	ϕ25–6	70–30	ϕ70–30
25–15	ϕ25–15	70–50	ϕ70–50
25–30	ϕ25–30	80–10	ϕ80–10
30–6	ϕ30–6	80–30	ϕ80–30
30–15	ϕ30–15	80–50	ϕ80–50
30–30	ϕ30–30		

③ Pad rubber material

N	NBR(Nitrile rubber)
S	Silicone rubber
U	Urethane rubber
F	Fluorine rubber
NE	Conductive NBR(Nitrile rubber)
SE	Conductive Silicone rubber

Note) Please consult with us for other material.

④ Connector

Blank	Without
T	Barb connector
O	Push–in connector

Fitting specifications

Description			ϕ6/8		ϕ10 ~ 50		ϕ60 ~ 80	
Vacuum port type			Top port	Side port	Top port	Side port	Top port	Side port
Connection type	Without connector		M3	M3	M5	M5	Rc1/8	Rc1/8
	Barb connector	ϕ4 × 2.5	○ (M3)	○ (M3)	×	×	×	×
		ϕ6 × 4	×	×	○ (M5)	○ (M5)	×	×
	Push–in connector	ϕ4 × 2.5	○ (M3)	○ (M3)	×	×	×	×
		ϕ6 × 4	×	×	○ (M5)	○ (M5)	×	×
Fitting attachment type			Male screw	Male screw	Male screw	Male screw	Male screw	Male screw

Note) For fittings with pad diameter from ϕ10mm we use dry bearing.

Pad standard specifications

Symbol	Material	Hardness(Hs)	Ambient temperature	Color	Volume resistivity Note 1・2
N	NBR(Nitrile rubber)	A55/S	–26 ~ 120℃	Black	–
S	Silicone rubber	A55/S	–60 ~ 250℃	White	–
U	Urethane rubber	A55/S	–20 ~ 75℃	Blue	–
F	Fluorine rubber	A70/S	–10 ~ 230℃	Black with white dot	–
NE	Conductive NBR(Nitrile rubber)	A70/S	–26 ~ 120℃	Black with blue dot	10^2 ~ 10^3 Ω・cm
SE	Conductive Silicone rubber	A55/S	–60 ~ 250℃	Black with red dot	10^2 ~ 10^4 Ω・cm

Note1) Volume resistivity shows conductivity, resistance value is per cm^3.
Note2) It is the measured value of in our designated test piece.

Applicable fitting table

		How to order	Round pad												
			6	8	10	15	20	25	30	35	40	50	60	70	80
Fitting	Top port	NAPFTS–5A–3–K	○	○											
		NAPFTS–5A–6–K	○	○											
		NAPCTS–10–3–K			○	○									
		NAPCTS–10–10–K			○	○									
		NAPCTS–10–15–K			○	○									
		NAPBTS–20–6–K					○	○							
		NAPBTS–20–15–K					○	○							
		NAPBTS–20–30–K					○	○							
		NAPFTS–20B–6–K							○	○	○	○			
		NAPFTS–20B–15–K							○	○	○	○			
		NAPFTS–20B–30–K							○	○	○	○			
		NAPFTS–60–10–K											○	○	○
		NAPFTS–60–30–K											○	○	○
		NAPFTS–60–50–K											○	○	○
	Side port	NAPFYS–5A–3–K	○	○											
		NAPFYS–5A–6–K	○	○											
		NAPCYS–10–3–K			○	○									
		NAPCYS–10–10–K			○	○									
		NAPCYS–10–15–K			○	○									
		NAPJYS–20–6–K					○	○							
		NAPJYS–25–15–K					○	○							
		NAPJYS–20–30–K					○	○							
		NAPFYS–20B–6–K							○	○	○	○			
		NAPFYS–20B–15–K							○	○	○	○			
		NAPFYS–20B–30–K							○	○	○	○			
		NAPFYS–60–10–K											○	○	○
		NAPFYS–60–30–K											○	○	○
		NAPFYS–60–50–K											○	○	○
Setting screw		TN–PF–15–M5			○	○									
		TN–PF–20–M5					○	○							
		TN–PF–25–M6							○	○	○				
		TN–PF–50–M6										○			

Note 1) Please attach directly to the fitting, pads with diameter from ϕ6 to 8mm.
Note 2) Please attach to the fitting, pads with diameter from ϕ10 to 50mm by using a setting screw.
Note 3) For pad with diameter from 60mm to 80mm, please screw the pad directly to the fitting.
Note 4) The mounting torque of the H8 nut for NAPFT/YS–5A–# type should be 2.0n・m or below. Otherwise, malfunction would occur.

Dimensions

Unit : mm <inch>

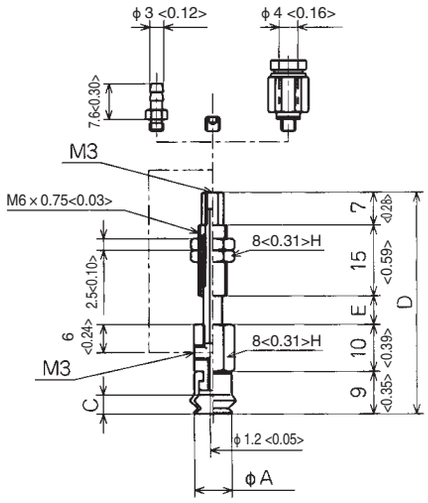

6／8

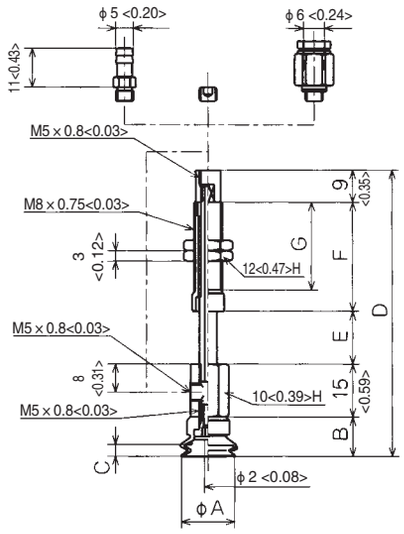

10／15

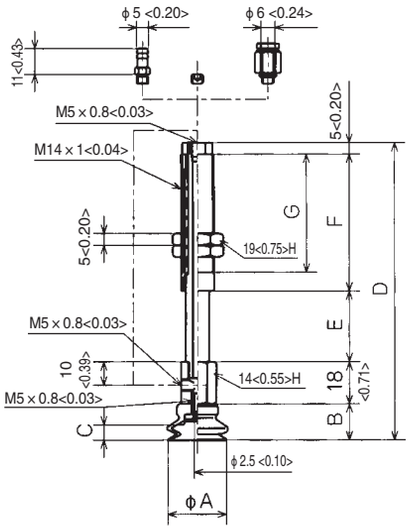

20／25

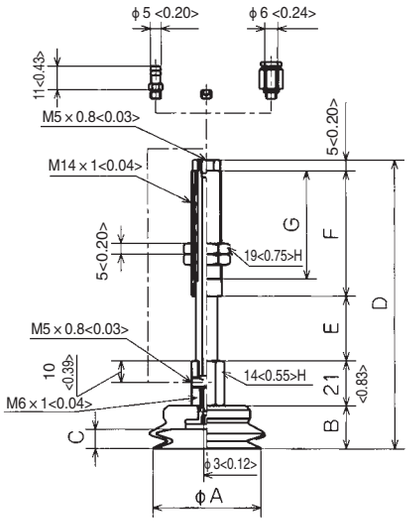

30／35／40／50

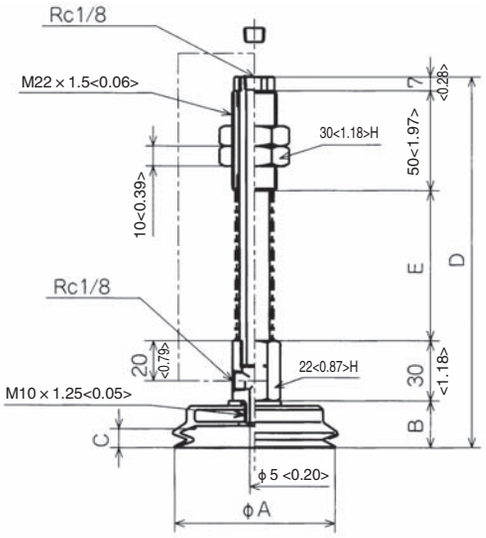

60／70／80

Suction pads

mm

NAPJT/YS	A	B	C	D	E	F	G	F^1	F^2	Mass(g)
NAPJT/YS–6–3	6		4.2	44	3			0.49	0.59	7
NAPJT/YS–6–6	6		4.2	47	6			0.49	0.69	7
NAPJT/YS–8–3	8		4	44	3			0.49	0.59	7
NAPJT/YS–8–6	8		4	47	6			0.49	0.69	7
NAPJT/YS–10–3	10	9.5	3	59.5	3	23	17	0.61	0.77	30.5
NAPJT/YS–10–10	10	9.5	3	66.5	10	23	17	0.61	1.17	31
NAPJT/YS–10–15	10	9.5	3	79	15	30.5	24.5	0.64	1.17	33.5
NAPJT/YS–15–3	15	11	3.3	61	3	23	17	0.61	0.77	31.5
NAPJT/YS–15–10	15	11	3.3	68	10	23	17	0.61	1.17	32
NAPJT/YS–15–15	15	11	3.3	80.5	15	30.5	24.5	0.64	1.17	34.5
NAPJT/YS–20–6	20	13	5.5	78	6	36	28	2.45	3.43	66
NAPJT/YS–20–15	20	13	5.5	87	15	36	28	2.45	4.9	71
NAPJT/YS–20–30	20	13	5.5	124	30	58	50	2.9	5.88	96
NAPJT/YS–25–6	25	15.5	6.5	80.5	6	36	28	2.45	3.43	68
NAPJT/YS–25–15	25	15.5	6.5	89.5	15	36	28	2.45	4.9	73
NAPJT/YS–25–30	25	15.5	6.5	126.5	30	58	50	2.9	5.88	98
NAPJT/YS–30–6	30	18	7	86	6	36	28	2.45	3.43	69
NAPJT/YS–30–15	30	18	7	95	15	36	28	2.45	4.9	74
NAPJT/YS–30–30	30	18	7	132	30	58	50	2.9	5.88	99
NAPJT/YS–35–6	35	18	7	86	6	36	28	2.45	3.43	71.5
NAPJT/YS–35–15	35	18	7	95	15	36	28	2.45	4.9	76.5
NAPJT/YS–35–30	35	18	7	132	30	58	50	2.9	5.88	101.5
NAPJT/YS–40–6	40	18	7.2	86	6	36	28	2.45	3.43	73.5
NAPJT/YS–40–15	40	18	7.2	95	15	36	28	2.45	4.9	78.5
NAPJT/YS–40–30	40	18	7.2	132	30	58	50	2.9	5.88	103.5
NAPJT/YS–50–6	50	20	9	88	6	36	28	2.45	3.43	89
NAPJT/YS–50–15	50	20	9	97	15	36	28	2.45	4.9	94
NAPJT/YS–50–30	50	20	9	134	30	58	50	2.9	5.88	119
NAPJT/YS–60–10	60	22.5	8	129.5	20			8.82	11.8	294
NAPJT/YS–60–30	60	22.5	8	159.5	50			6.76	15.6	328
NAPJT/YS–60–50	60	22.5	8	184.5	75			8.33	19.6	355
NAPJT/YS–70–10	70	23.5	9.5	130.5	20			8.82	11.8	309
NAPJT/YS–70–30	70	23.5	9.5	160.5	50			6.76	15.6	346
NAPJT/YS–70–50	70	23.5	9.5	185.5	75			8.33	19.6	370
NAPJT/YS–80–10	80	23.5	9.5	130.5	20			8.82	11.8	338
NAPJT/YS–80–30	80	23.5	9.5	160.5	50			6.76	15.6	372
NAPJT/YS–80–50	80	23.5	9.5	185.5	75			8.33	19.6	399

Note) Symbol F^1 in the table shows a spring load (N) at 0 stroke, and F^2 at full stroke.

inch

NAPJT/YS	A	B	C	D	E	F	G	F^1	F^2	Mass(g)
NAPJT/YS–6–3	0.24		0.17	1.73	0.12			0.49	0.59	7
NAPJT/YS–6–6	0.24		0.17	1.85	0.24			0.49	0.69	7
NAPJT/YS–8–3	0.31		0.16	1.73	0.12			0.49	0.59	7
NAPJT/YS–8–6	0.31		0.16	1.85	0.24			0.49	0.69	7
NAPJT/YS–10–3	0.39	0.37	0.12	2.34	0.12	0.91	0.67	0.61	0.77	30.5
NAPJT/YS–10–10	0.39	0.37	0.12	2.62	0.39	0.91	0.67	0.61	1.17	31
NAPJT/YS–10–15	0.39	0.37	0.12	3.11	0.59	1.2	0.96	0.64	1.17	33.5
NAPJT/YS–15–3	0.59	0.43	0.13	2.4	0.12	0.91	0.67	0.61	0.77	31.5
NAPJT/YS–15–10	0.59	0.43	0.13	2.68	0.39	0.91	0.67	0.61	1.17	32
NAPJT/YS–15–15	0.59	0.43	0.13	3.17	0.59	1.2	0.96	0.64	1.17	34.5
NAPJT/YS–20–6	0.79	0.51	0.22	3.07	0.24	1.42	1.1	2.45	3.43	66
NAPJT/YS–20–15	0.79	0.51	0.22	3.43	0.59	1.42	1.1	2.45	4.9	71
NAPJT/YS–20–30	0.79	0.51	0.22	4.88	1.18	2.28	1.97	2.9	5.88	96
NAPJT/YS–25–6	0.98	0.61	0.26	3.17	0.24	1.42	1.1	2.45	3.43	68
NAPJT/YS–25–15	0.98	0.61	0.26	3.52	0.59	1.42	1.1	2.45	4.9	73
NAPJT/YS–25–30	0.98	0.61	0.26	4.98	1.18	2.28	1.97	2.9	5.88	98
NAPJT/YS–30–6	1.18	0.71	0.28	3.39	0.24	1.42	1.1	2.45	3.43	69
NAPJT/YS–30–15	1.18	0.71	0.28	3.74	0.59	1.42	1.1	2.45	4.9	74
NAPJT/YS–30–30	1.18	0.71	0.28	5.2	1.18	2.28	1.97	2.9	5.88	99
NAPJT/YS–35–6	1.38	0.71	0.28	3.39	0.24	1.42	1.1	2.45	3.43	71.5
NAPJT/YS–35–15	1.38	0.71	0.28	3.74	0.59	1.42	1.1	2.45	4.9	76.5
NAPJT/YS–35–30	1.38	0.71	0.28	5.2	1.18	2.28	1.97	2.9	5.88	101.5
NAPJT/YS–40–6	1.57	0.71	0.28	3.39	0.24	1.42	1.1	2.45	3.43	73.5
NAPJT/YS–40–15	1.57	0.71	0.28	3.74	0.59	1.42	1.1	2.45	4.9	78.5
NAPJT/YS–40–30	1.57	0.71	0.28	5.2	1.18	2.28	1.97	2.9	5.88	103.5
NAPJT/YS–50–6	1.97	0.79	0.35	3.46	0.24	1.42	1.1	2.45	3.43	89
NAPJT/YS–50–15	1.97	0.79	0.35	3.82	0.59	1.42	1.1	2.45	4.9	94
NAPJT/YS–50–30	1.97	0.79	0.35	5.28	1.18	2.28	1.97	2.9	5.88	119
NAPJT/YS–60–10	2.36	0.89	0.31	5.1	0.79			8.82	11.8	294
NAPJT/YS–60–30	2.36	0.89	0.31	6.28	1.97			6.76	15.6	328
NAPJT/YS–60–50	2.36	0.89	0.31	7.26	2.95			8.33	19.6	355
NAPJT/YS–70–10	2.76	0.93	0.37	5.14	0.79			8.82	11.8	309
NAPJT/YS–70–30	2.76	0.93	0.37	6.32	1.97			6.76	15.6	346
NAPJT/YS–70–50	2.76	0.93	0.37	7.3	2.95			8.33	19.6	370
NAPJT/YS–80–10	3.15	0.93	0.37	5.14	0.79			8.82	11.8	338
NAPJT/YS–80–30	3.15	0.93	0.37	6.32	1.97			6.76	15.6	372
NAPJT/YS–80–50	3.15	0.93	0.37	7.3	2.95			8.33	19.6	399

Note) Symbol F^1 in the table shows a spring load (N) at 0 stroke, and F^2 at full stroke.

Connector mass(g)

	Tube O.D ϕ4	Tube O.D ϕ6
T	0.5	1.5
O	3.0	4.0

Pad with spring fitting, non–rotation / NAPJTH・YH

How to order

① ② ③ ④

NAPJ [T] H – [6–3] – [N] – [T]

① Vacuum port

T	Top port
Y	Side port

② Pad diameter – stroke (mm)

6–3	ϕ6–3	25–6	ϕ25–6
6–10	ϕ6–10	25–15	ϕ25–15
6–15	ϕ6–15	25–30	ϕ25–30
8–3	ϕ8–3	30–6	ϕ30–6
8–10	ϕ8–10	30–15	ϕ30–15
8–15	ϕ8–15	30–30	ϕ30–30
10–3	ϕ10–3	35–6	ϕ35–6
10–10	ϕ10–10	35–15	ϕ35–15
10–15	ϕ10–15	35–30	ϕ35–30
15–3	ϕ15–3	40–6	ϕ40–6
15–10	ϕ15–10	40–15	ϕ40–15
15–15	ϕ15–15	40–30	ϕ40–30
20–6	ϕ20–6	50–6	ϕ50–6
20–15	ϕ20–15	50–15	ϕ50–15
20–30	ϕ20–30	50–30	ϕ50–30

③ Pad rubber material

N	NBR(Nitrile rubber)
S	Silicone rubber
U	Urethane rubber
F	Fluorine rubber
NE	Conductive NBR(Nitrile rubber)
SE	Conductive Silicone rubber

Note) Please consult with us for other material.

④ Connector

Blank	Without
T	Barb connector
O	Push–in connector

Fitting specifications

Description			ϕ6 ~ 50	
Vacuum port type			Top port	Side port
Connection type	Without connector		M5	M5
	Barb connector	ϕ4 × 2.5	×	×
		ϕ6 × 4	○ (M5)	○ (M5)
	Push–in connector	ϕ4 × 2.5	×	×
		ϕ6 × 4	○ (M5)	○ (M5)
Fitting attachment type			Male screw	Male screw

Pad standard specifications

Symbol	Material	Hardness(Hs)	Ambient temperature	Color	Volume resistivity Note 1・2
N	NBR(Nitrile rubber)	A55/S	–26 ~ 120℃	Black	–
S	Silicone rubber	A55/S	–60 ~ 250℃	White	–
U	Urethane rubber	A55/S	–20 ~ 75℃	Blue	–
F	Fluorine rubber	A70/S	–10 ~ 230℃	Black with white dot	–
NE	Conductive NBR(Nitrile rubber)	A70/S	–26 ~ 120℃	Black with blue dot	10^2 ~ 10^3 Ω・cm
SE	Conductive Silicone rubber	A55/S	–60 ~ 250℃	Black with red dot	10^2 ~ 10^4 Ω・cm

Note1) Volume resistivity shows conductivity, resistance value is per cm^3.
Note2) It is the measured value of in our designated test piece.

Applicable fitting table

		How to order	Round pad									
			6	8	10	15	20	25	30	35	40	50
Fitting	Top port	NAPFTH–5A–3–K	○	○								
		NAPFTH–5A–10–K	○	○								
		NAPFTH–5A–15–K	○	○								
		NAPCTH–10–3–K			○	○						
		NAPCTH–10–10–K			○	○						
		NAPCTH–10–15–K			○	○						
		NAPBTH–20–6–K					○	○				
		NAPBTH–20–15–K					○	○				
		NAPBTH–20–30–K					○	○				
		NAPFTH–20B–6–K							○	○	○	○
		NAPFTH–20B–15–K							○	○	○	○
		NAPFTH–20B–30–K							○	○	○	○
	Side port	NAPFYH–5A–3–K	○	○								
		NAPFYH–5A–10–K	○	○								
		NAPFYH–5A–15–K	○	○								
		NAPCYH–10–3–K			○	○						
		NAPCYH–10–10–K			○	○						
		NAPCYH–10–15–K			○	○						
		NAPBYH–20–6–K					○	○				
		NAPBYH–20–15–K					○	○				
		NAPBYH–20–30–K					○	○				
		NAPFYH–20B–6–K							○	○	○	○
		NAPFYH–20B–15–K							○	○	○	○
		NAPFYH–20B–30–K							○	○	○	○
Setting screw		TN–PF–15–M5			○	○						
		TN–PF–20–M5					○	○				
		TN–PF–25–M6							○	○	○	
		TN–PF–50–M6										○

Note 1) Please attach directly to the fitting, pads with diameter from ϕ6 to 8mm.
Note 2) Please attach to the fitting, pads with diameter from ϕ10 to 50mm by using a setting screw.

Dimensions

Unit : mm <inch>

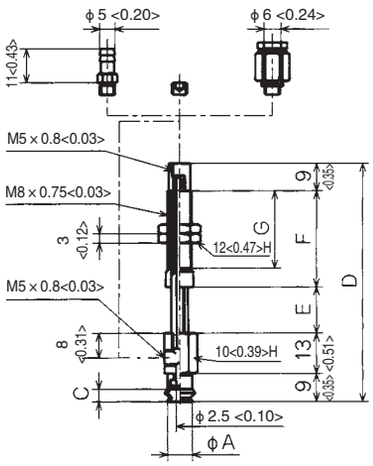

6／8

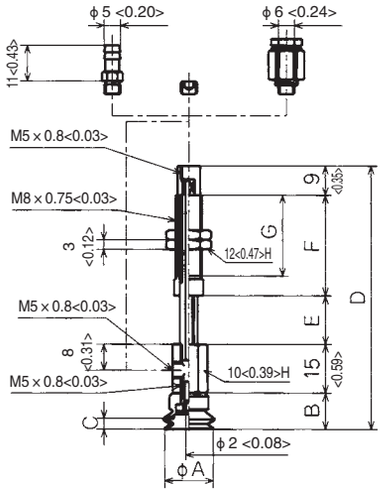

10／15

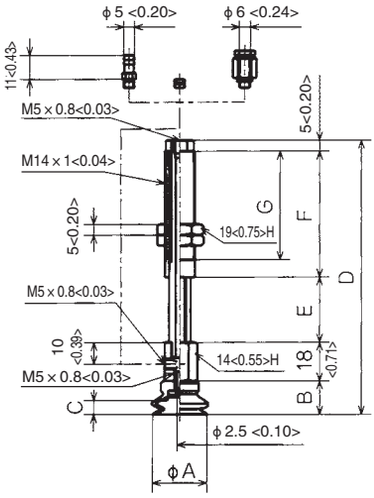

20／25

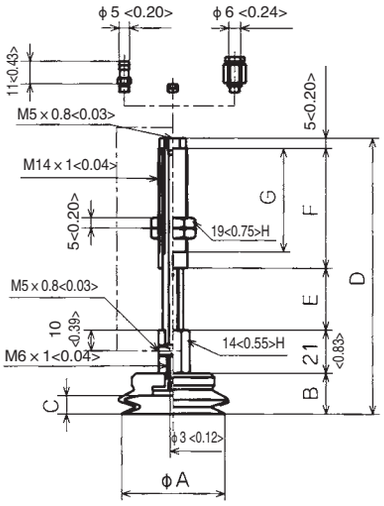

30／35／40／50

mm

NAPJT/YH	A	B	C	D	E	F	G	F^1	F^2	Mass(g)
NAPJT/YH–6–3	6		4.2	57	3	23	17	0.61	0.77	18.5
NAPJT/YH–6–10	6		4.2	64	10	23	17	0.61	1.17	19
NAPJT/YH–6–15	6		4.2	76.5	15	30.5	24.5	0.64	1.17	22
NAPJT/YH–8–3	8		4	57	3	23	17	0.61	0.77	18.5
NAPJT/YH–8–10	8		4	64	10	23	17	0.61	1.17	19
NAPJT/YH–8–15	8		4	76.5	15	30.5	24.5	0.64	1.17	22
NAPJT/YH–10–3	10	9.5	3	59.5	3	23	17	0.61	0.77	31
NAPJT/YH–10–10	10	9.5	3	66.5	10	23	17	0.61	1.17	31.5
NAPJT/YH–10–15	10	9.5	3	79	15	30.5	24.5	0.64	1.17	34.5
NAPJT/YH–15–3	15	11	3.3	61	3	23	17	0.61	0.77	32
NAPJT/YH–15–10	15	11	3.3	68	10	23	17	0.61	1.17	32.5
NAPJT/YH–15–15	15	11	3.3	80.5	15	30.5	24.5	0.64	1.17	35.5
NAPJT/YH–20–6	20	13	5.5	78	6	36	28	2.45	3.43	64.5
NAPJT/YH–20–15	20	13	5.5	87	15	36	28	2.45	4.9	69.5
NAPJT/YH–20–30	20	13	5.5	124	30	58	50	2.9	5.88	93.5
NAPJT/YH–25–6	25	15.5	6.5	80.5	6	36	28	2.45	3.43	66
NAPJT/YH–25–15	25	15.5	6.5	89.5	15	36	28	2.45	4.9	71
NAPJT/YH–25–30	25	15.5	6.5	126.5	30	58	50	2.9	5.88	95
NAPJT/YH–30–6	30	18	7	86	6	36	28	2.45	3.43	67.5
NAPJT/YH–30–15	30	18	7	95	15	36	28	2.45	4.9	72.5
NAPJT/YH–30–30	30	18	7	132	30	58	50	2.9	5.88	96.5
NAPJT/YH–35–6	35	18	7	86	6	36	28	2.45	3.43	70
NAPJT/YH–35–15	35	18	7	95	15	36	28	2.45	4.9	75
NAPJT/YH–35–30	35	18	7	132	30	58	50	2.9	5.88	99
NAPJT/YH–40–6	40	18	7.2	86	6	36	28	2.45	3.43	72
NAPJT/YH–40–15	40	18	7.2	95	15	36	28	2.45	4.9	77
NAPJT/YH–40–30	40	18	7.2	132	30	58	50	2.9	5.88	101
NAPJT/YH–50–6	50	20	9	88	6	36	28	2.45	3.43	87.5
NAPJT/YH–50–15	50	20	9	97	15	36	28	2.45	4.9	92.5
NAPJT/YH–50–30	50	20	9	134	30	58	50	2.9	5.88	116.5

Note) Symbol F^1 in the table shows a spring load (N) at 0 stroke, and F^2 at full stroke.

inch

NAPJT/YH	A	B	C	D	E	F	G	F^1	F^2	Mass(g)
NAPJT/YH–6–3	0.24		0.17	2.24	0.12	0.91	0.67	0.61	0.77	18.5
NAPJT/YH–6–10	0.24		0.17	2.52	0.39	0.91	0.67	0.61	1.17	19
NAPJT/YH–6–15	0.24		0.17	3.01	0.59	1.2	0.96	0.64	1.17	22
NAPJT/YH–8–3	0.31		0.16	2.24	0.12	0.91	0.67	0.61	0.77	18.5
NAPJT/YH–8–10	0.31		0.16	2.52	0.39	0.91	0.67	0.61	1.17	19
NAPJT/YH–8–15	0.31		0.16	3.01	0.59	1.2	0.96	0.64	1.17	22
NAPJT/YH–10–3	0.39	0.37	0.12	2.34	0.12	0.91	0.67	0.61	0.77	31
NAPJT/YH–10–10	0.39	0.37	0.12	2.62	0.39	0.91	0.67	0.61	1.17	31.5
NAPJT/YH–10–15	0.39	0.37	0.12	3.11	0.59	1.2	0.96	0.64	1.17	34.5
NAPJT/YH–15–3	0.59	0.43	0.13	2.4	0.12	0.91	0.67	0.61	0.77	32
NAPJT/YH–15–10	0.59	0.43	0.13	2.68	0.39	0.91	0.67	0.61	1.17	32.5
NAPJT/YH–15–15	0.59	0.43	0.13	3.17	0.59	1.2	0.96	0.64	1.17	35.5
NAPJT/YH–20–6	0.79	0.51	0.22	3.07	0.24	1.42	1.1	2.45	3.43	64.5
NAPJT/YH–20–15	0.79	0.51	0.22	3.43	0.59	1.42	1.1	2.45	4.9	69.5
NAPJT/YH–20–30	0.79	0.51	0.22	4.88	1.18	2.28	1.97	2.9	5.88	93.5
NAPJT/YH–25–6	0.98	0.61	0.26	3.17	0.24	1.42	1.1	2.45	3.43	66
NAPJT/YH–25–15	0.98	0.61	0.26	3.52	0.59	1.42	1.1	2.45	4.9	71
NAPJT/YH–25–30	0.98	0.61	0.26	4.98	1.18	2.28	1.97	2.9	5.88	95
NAPJT/YH–30–6	1.18	0.71	0.28	3.39	0.24	1.42	1.1	2.45	3.43	67.5
NAPJT/YH–30–15	1.18	0.71	0.28	3.74	0.59	1.42	1.1	2.45	4.9	72.5
NAPJT/YH–30–30	1.18	0.71	0.28	5.2	1.18	2.28	1.97	2.9	5.88	96.5
NAPJT/YH–35–6	1.38	0.71	0.28	3.39	0.24	1.42	1.1	2.45	3.43	70
NAPJT/YH–35–15	1.38	0.71	0.28	3.74	0.59	1.42	1.1	2.45	4.9	75
NAPJT/YH–35–30	1.38	0.71	0.28	5.2	1.18	2.28	1.97	2.9	5.88	99
NAPJT/YH–40–6	1.57	0.71	0.28	3.39	0.24	1.42	1.1	2.45	3.43	72
NAPJT/YH–40–15	1.57	0.71	0.28	3.74	0.59	1.42	1.1	2.45	4.9	77
NAPJT/YH–40–30	1.57	0.71	0.28	5.2	1.18	2.28	1.97	2.9	5.88	101
NAPJT/YH–50–6	1.97	0.79	0.35	3.46	0.24	1.42	1.1	2.45	3.43	87.5
NAPJT/YH–50–15	1.97	0.79	0.35	3.82	0.59	1.42	1.1	2.45	4.9	92.5
NAPJT/YH–50–30	1.97	0.79	0.35	5.28	1.18	2.28	1.97	2.9	5.88	116.5

Note) Symbol F^1 in the table shows a spring load (N) at 0 stroke, and F^2 at full stroke.

Connector mass(g)

	Tube O.D ϕ4	Tube O.D ϕ6
T	0.5	1.5
O	3.0	4.0

Bellows pad / PJG

How to order

PJG – ① 6 – ② N

① Pad diameter (mm)

4	ϕ4	30	ϕ30
6	ϕ6	35	ϕ35
8	ϕ8	40	ϕ40
10	ϕ10	50	ϕ50
15	ϕ15	60	ϕ60
20	ϕ20	70	ϕ70
25	ϕ25	80	ϕ80

② Pad rubber material

N	NBR(Nitrile rubber)
S	Silicone rubber
U	Urethane rubber
F	Fluorine rubber
NE	Conductive NBR(Nitrile rubber)
SE	Conductive Silicone rubber

Note) Please consult with us for other material.

Pad standard specifications

Symbol	Material	Hardness(Hs)	Ambient temperature	Color	Volume resistivity Note 1・2
N	NBR(Nitrile rubber)	A55/S	–26 ~ 120℃	Black	–
S	Silicone rubber	A55/S	–60 ~ 250℃	White	–
U	Urethane rubber	A55/S	–20 ~ 75℃	Blue	–
F	Fluorine rubber	A70/S	–10 ~ 230℃	Black with white dot	–
NE	Conductive NBR(Nitrile rubber)	A70/S	–26 ~ 120℃	Black with blue dot	10^2 ~ 10^3 Ω・cm
SE	Conductive Silicone rubber	A55/S	–60 ~ 250℃	Black with red dot	10^2 ~ 10^4 Ω・cm

Note1) Volume resistivity shows conductivity, resistance value is per cm^3.
Note2) It is the measured value of in our designated test piece.

Dimensions

Unit : mm <inch>

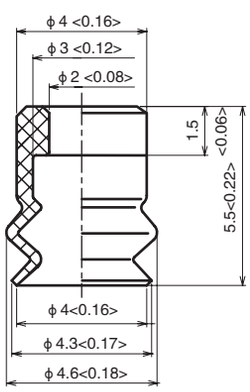

PJG-4

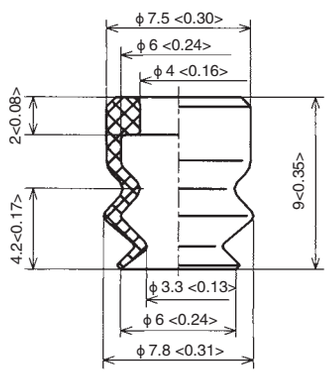

PJG-6

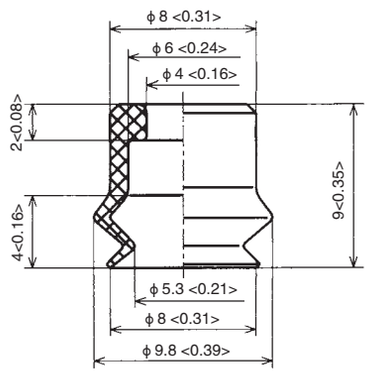

PJG-8

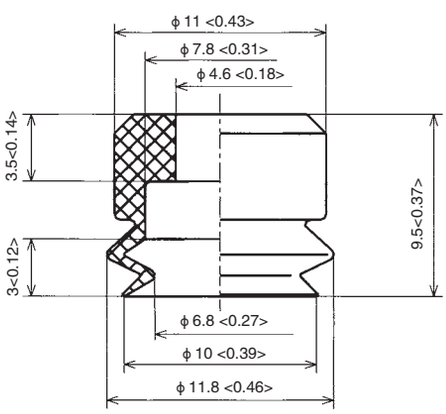

PJG-10

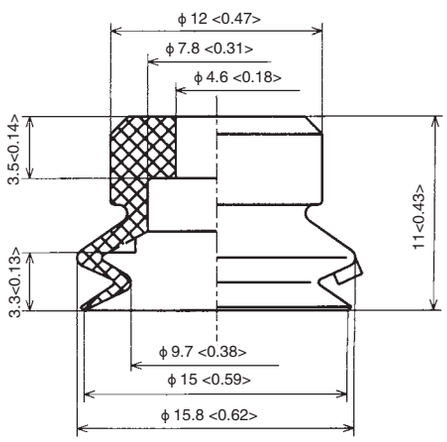

PJG-15

Dimensions

Unit : mm <inch>

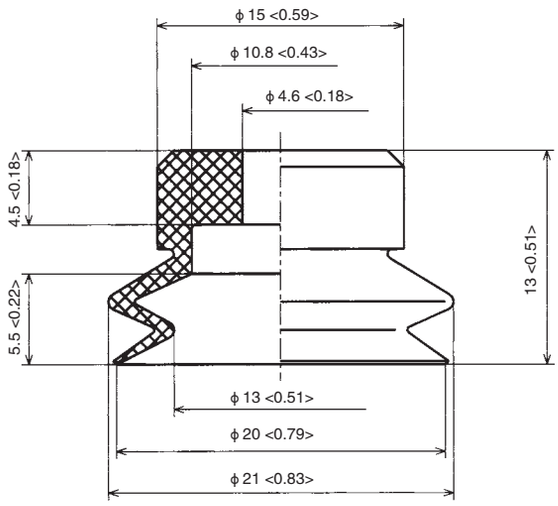

PJG-20

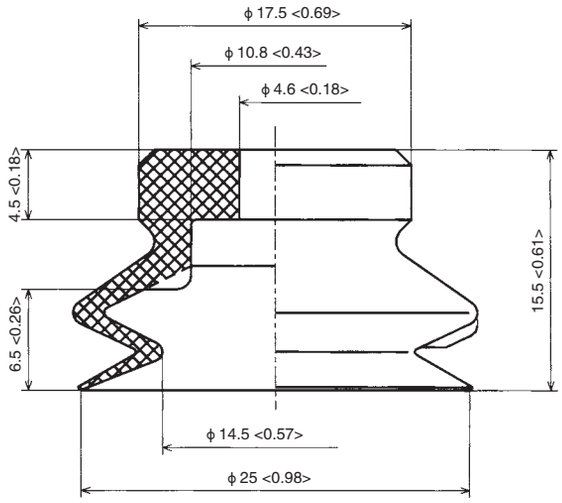

PJG-25

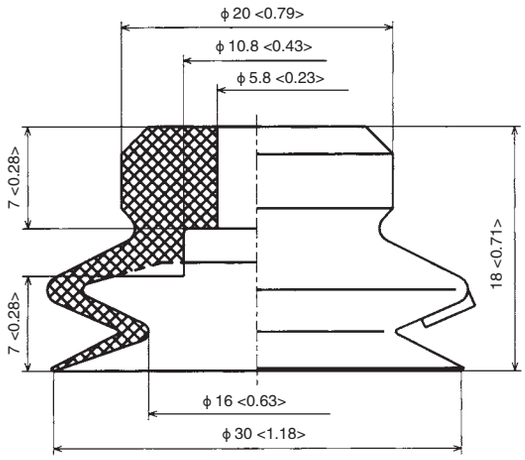

PJG-30

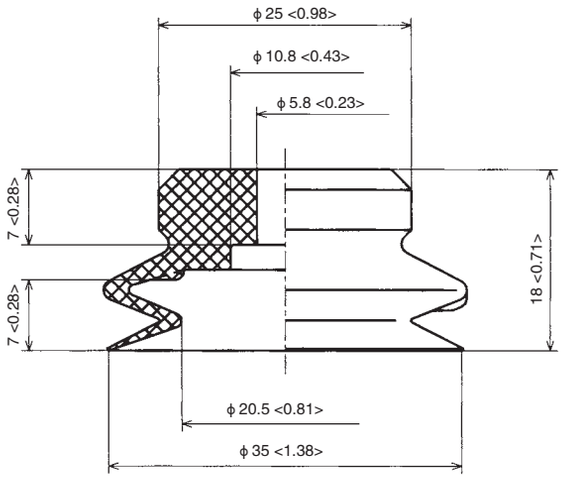

PJG-35

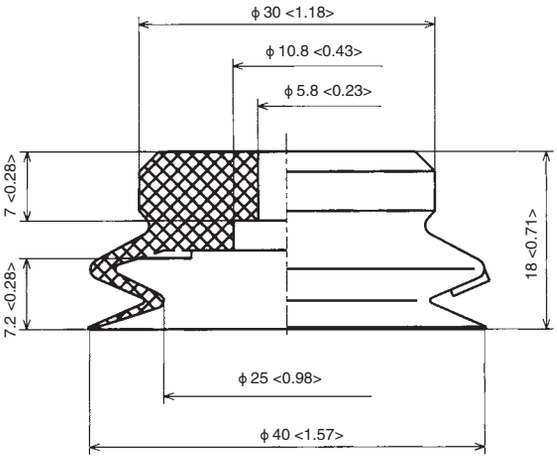

PJG-40

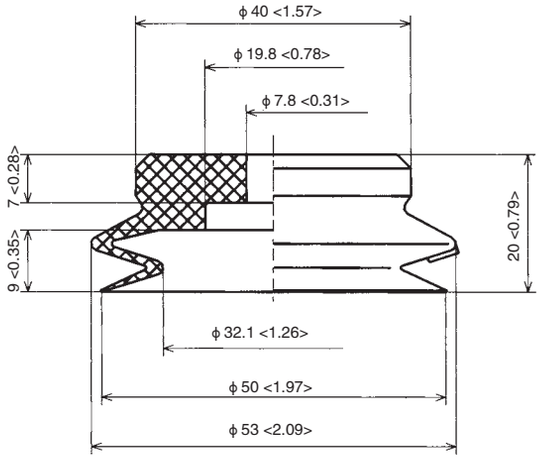

PJG-50

Dimensions

Unit : mm <inch>

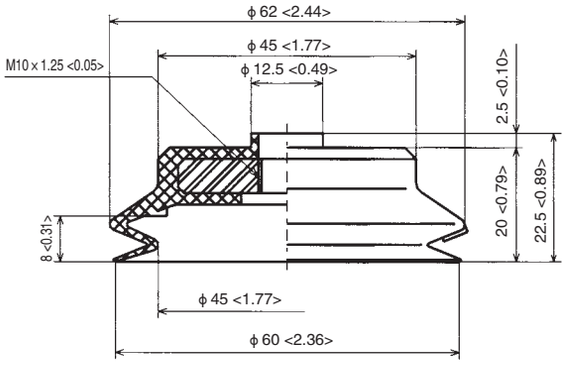

PJG-60

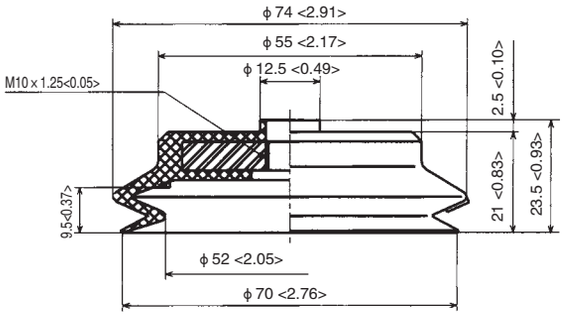

PJG-70

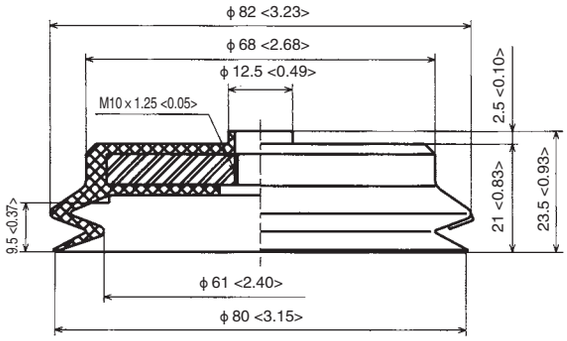

PJG-80