Standard vacuum ejector
MCV series

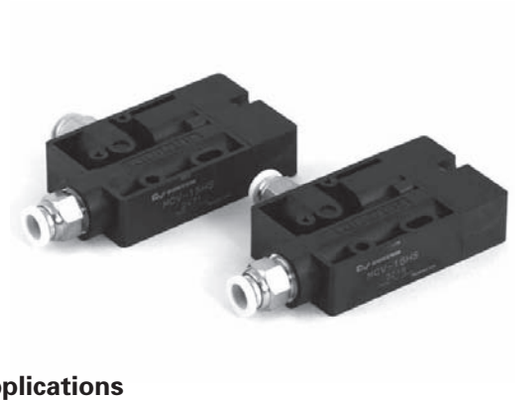

- Resin body
- Push–in connector mounted
- Compact size
  78×42.5mm
- Lightweight
  50% reduced (compared to CV–15)

Applications

- Suction the general workpieces
- Weight saving for the handler, mounting machine

How to order

MCV — ① 05 ② H ③ S ④ S ⑤ 08

① Nozzle size	
05	ϕ 0.5
10	ϕ 1.0
15	ϕ 1.5

② Max. vacuum pressure	
H	–87kPa
L	–55kPa

③ Supply pressure	
S	0.45/0.5MPa
R	0.35MPa

⑤ Push–in connector	
Blank	ϕ6 (Rc1/4)
08	ϕ8 (Rc1/4)*

*For nozzle size ϕ0.5 and ϕ1.0.

④ Pressure switch	
Blank	without switch
S	with switch

Note:①②③applicable models

①	②	③ S	③ R
05	H	○	○
	L	○	×
10	H	○	○
	L	○	×
15	H	○	○
	L	○	×

Maintenance parts

MCV–CK (Switch unit) MT–07RL (Reed switch) MCV–S (Silencer)

Specifications

Description	Unit	MCV–05			MCV–10			MCV–15		
		HS	HR	LS	HS	HR	LS	HS	HR	LS
Fluid		Non–lubricated air / non–corrosive gas								
Ambient temperature	℃	0 ~ 60 without freezing								
Operating pressure range	MPa	0.1 ~ 0.6								
Nozzle size	mm	0.5			1.0			1.5		
Nominal pressure	MPa	0.45	0.35	0.45	0.45	0.35	0.45	0.5	0.35	0.5
Vacuum (air) flow	ℓ /min (ANR)	5.4	5	11	24	22	38	56	49	84
Max. vacuum pressure	kPa	–87		–54	–87		–56	–87		–56
Air consumption	ℓ /min (ANR)	11	12	11	46			95	105	95
Mass	g	79						90		100

Sensor

Description	Unit	
Fluid		Air (non corrosive, nonflammable gas)
Pressure range	kPa	–40 ~ –70(default setting is –40kPa)
Operating ambient temperature	℃	0 ~ 60
Hysteresis	kPa	15 ± 5
Repeatability	kPa	± 10
Reed switch		MT–07RL
Power supply	V	AC/DC5 ~ 240
Current load	mA	max 50

Description	Unit.	MT–07RL
Switch type		Reed switch
Mounting type		Groove type
Load voltage	V	AC/DC5 ~ 240
Load current	mA	max 50
Contact capacitance	W	max 6
Voltage drop	V	max 2.5
Operating ambient temperature	℃	–10 ~ 70
Degree of protection		IP67
Protection circuit		None
Cable		O.D. ϕ 2.8 2 cores gray PU1m
Indicator		Green LED

Construction

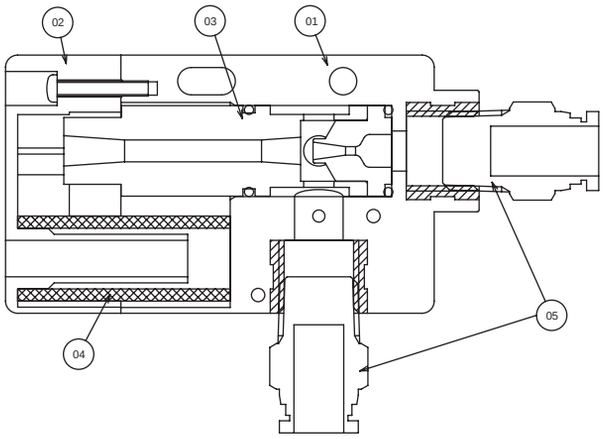

No	Part name	Materia
01	Body	PA
02	Silencer case	PA
03	Nozzle kit	Al, NBR
04	Silencer element	PVA
05	Push–in connecter	–

Performance charts

Maximum vacuum pressure characteristic

● MCV–□□HS

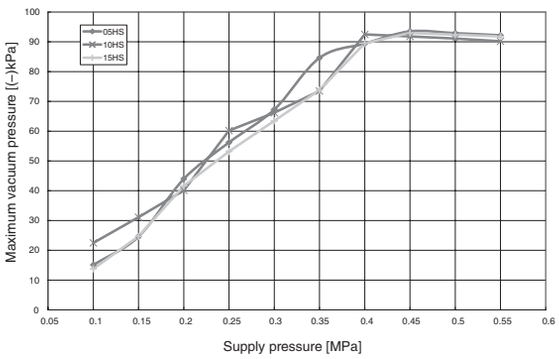

● MCV–□□LS

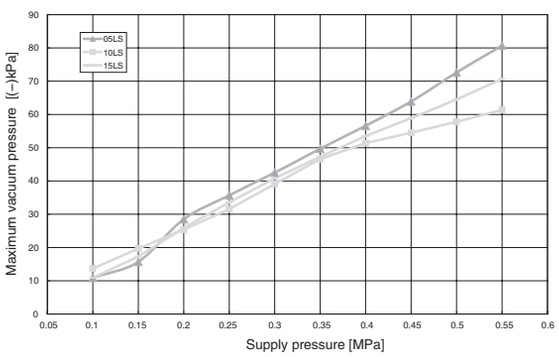

● MCV–□□HR

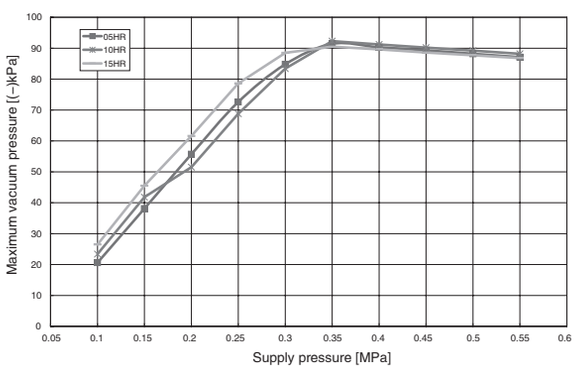

Air consumption characteristics

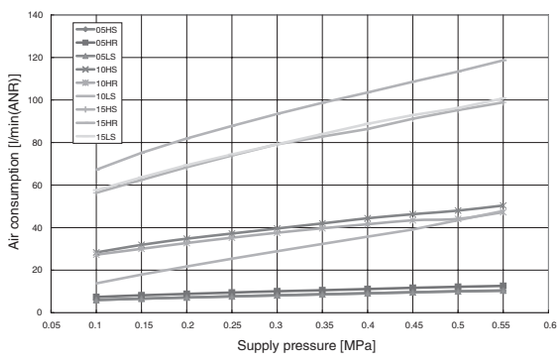

Vacuum (air) flow-vacuum pressure characteristics

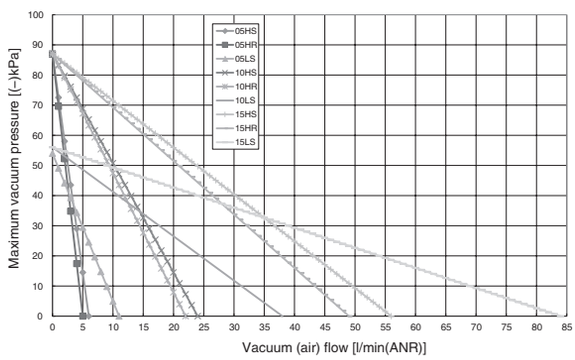

Maximum Vacuum (air) flow characteristics

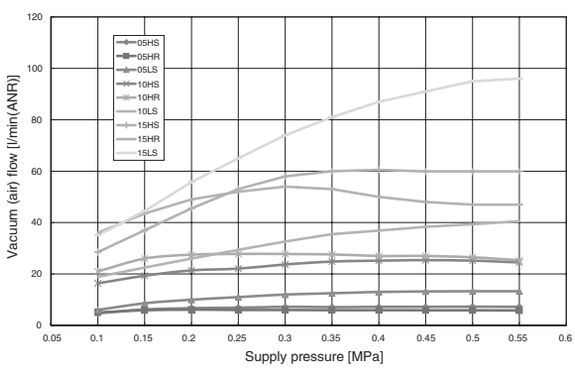

Dimensions

Unit : mm <inch>

MCV (Without switc)

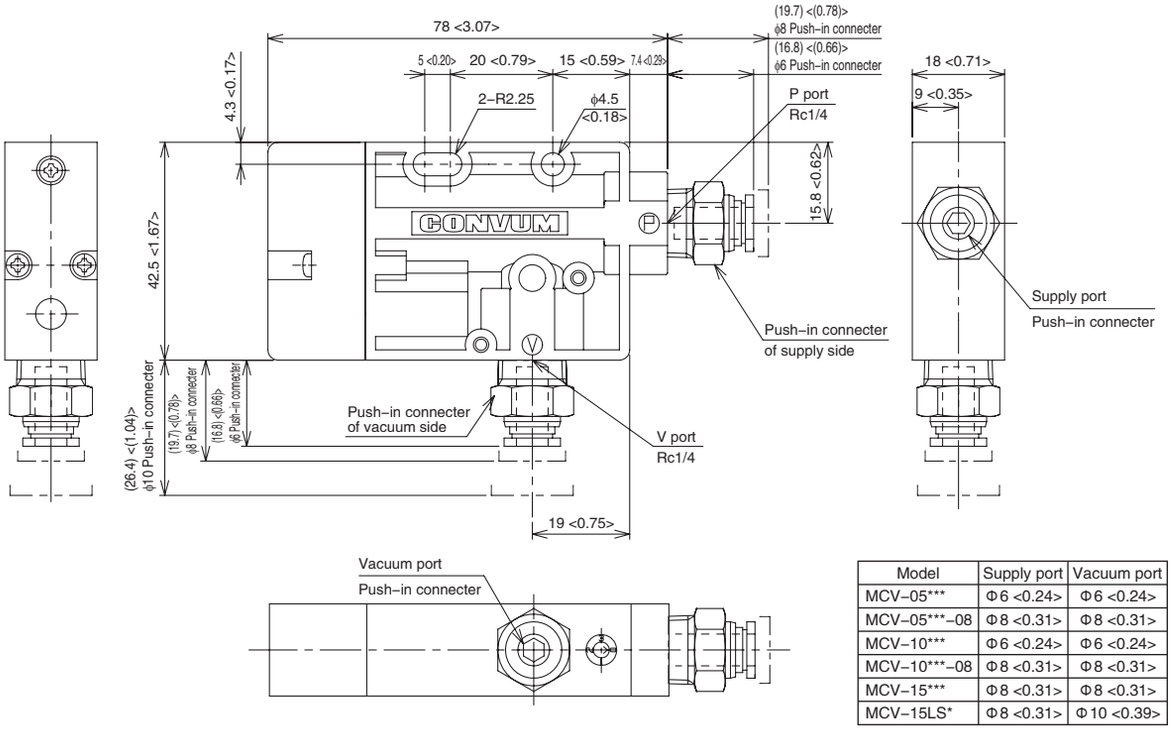

Model	Supply port	Vacuum port
MCV–05***	Φ6 <0.24>	Φ6 <0.24>
MCV–05***–08	Φ8 <0.31>	Φ8 <0.31>
MCV–10***	Φ6 <0.24>	Φ6 <0.24>
MCV–10***–08	Φ8 <0.31>	Φ8 <0.31>
MCV–15***	Φ8 <0.31>	Φ8 <0.31>
MCV–15LS*	Φ8 <0.31>	Φ10 <0.39>

MCV (With switch)

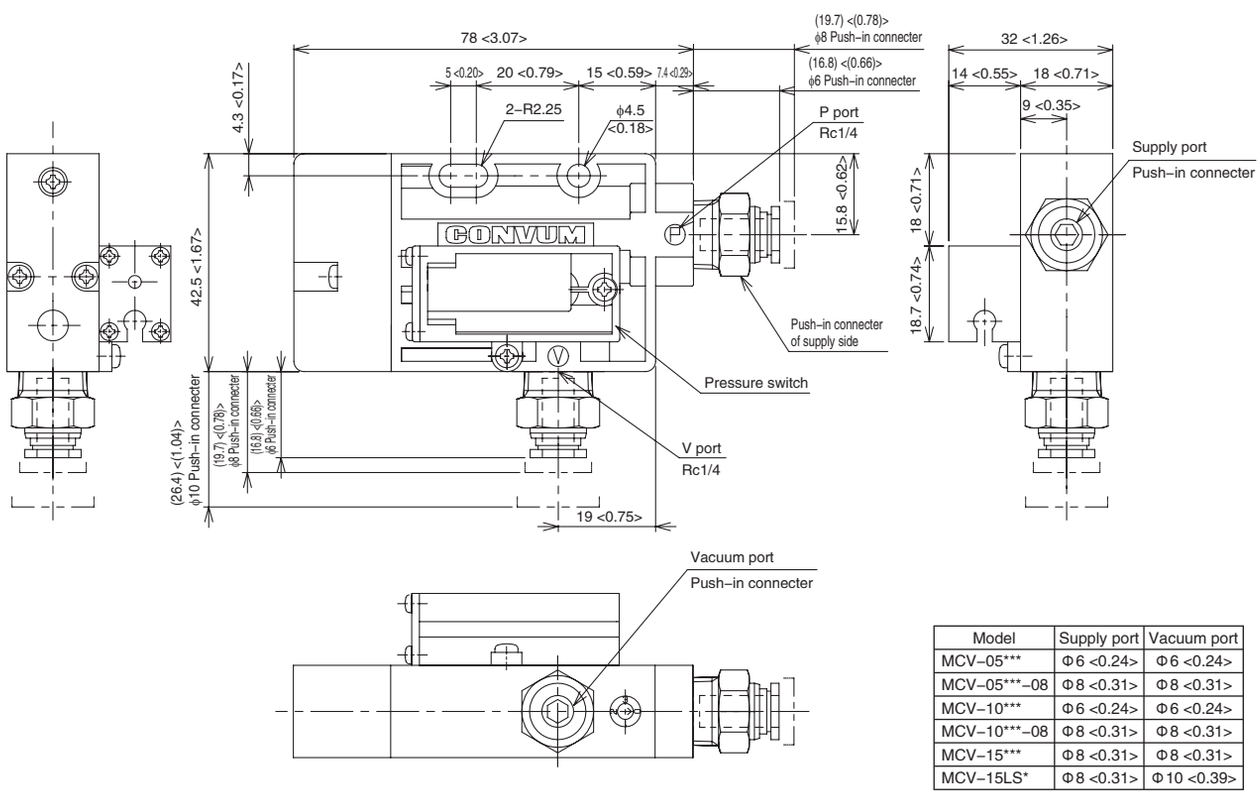

Model	Supply port	Vacuum port
MCV–05***	Φ6 <0.24>	Φ6 <0.24>
MCV–05***–08	Φ8 <0.31>	Φ8 <0.31>
MCV–10***	Φ6 <0.24>	Φ6 <0.24>
MCV–10***–08	Φ8 <0.31>	Φ8 <0.31>
MCV–15***	Φ8 <0.31>	Φ8 <0.31>
MCV–15LS*	Φ8 <0.31>	Φ10 <0.39>