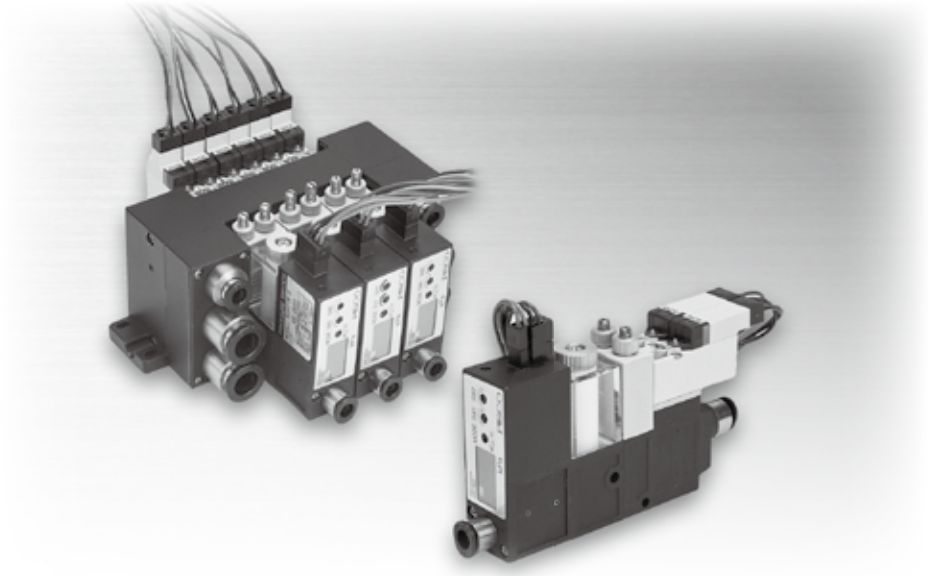

External Vacuum Controller with Blow-off Air and Relief Pressure Adjustment.

External Vacuum Controller VJP Series

- *Pressure adjustment function and blow-off flow adjusting function, it enables to prevent works from being blown away.*
- *A relief mechanism built into the blow-off circuit which breaks the vacuum (extra pressure is relieved) realizes shorter blow-off time.*

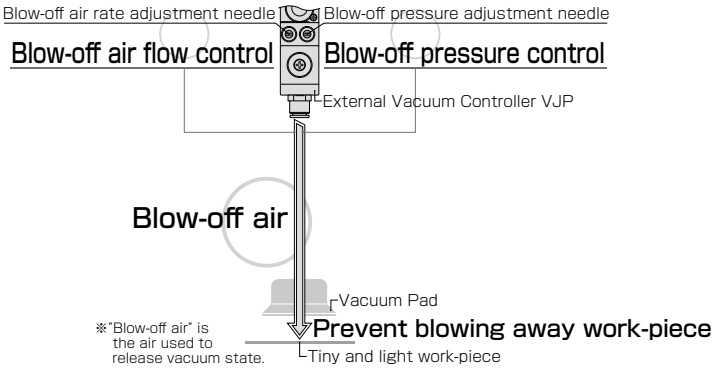

Characteristics

- *Wide variety of combinations enables to meet various applications. Complex vacuum generator VJ Series is also available (P.162)*

- *Manifold type is available. User-friendly wiring. 2 selections of pipe lead-out directions; Front lead-out type and rear lead-out type.*

- *3 Supply valve types*
  ・Double solenoid type (Vacuum retention type, selectable for saving energy)
  ・Normally closed type
  ・Normally open type

- *Visibility improvement by adopting LED display for vacuum switch indication. There are 2 types of vacuum switch; 2 switch output and 1 switch output and analog output.*

Construction

Stand-alone type, Without vacuum switch

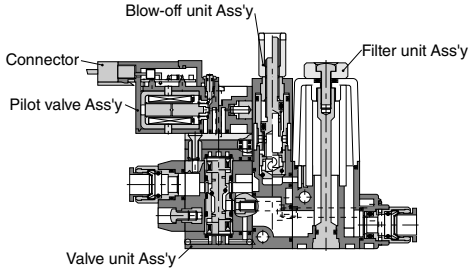

Stand-alone type, With vacuum switch

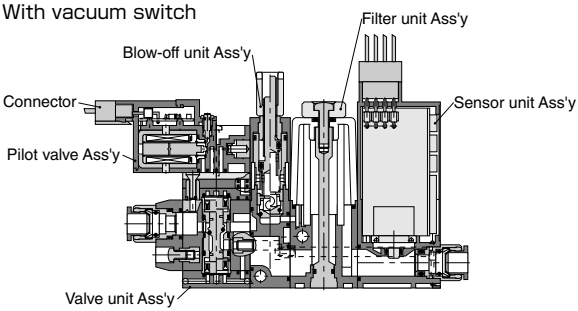

Manifold type, Without vacuum switch

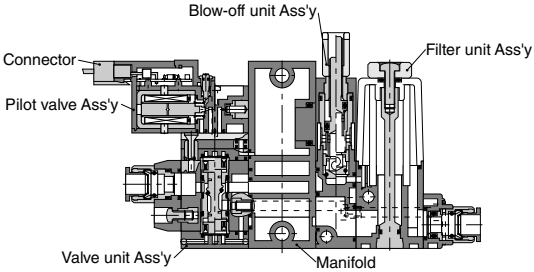

Manifold type, With vacuum switch

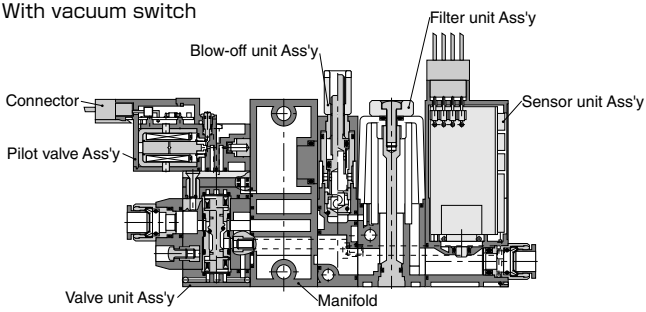

Model Designation (Example)

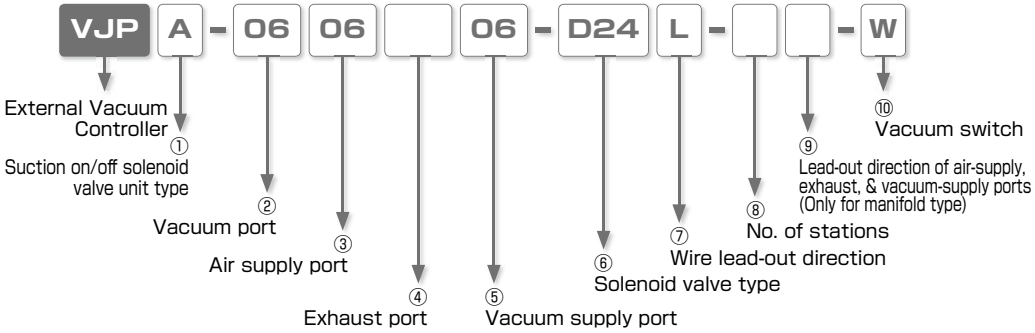

① Suction on/off solenoid valve unit type

Code	Valve unit	Code	Valve unit	Code	Valve unit
A	Double solenoid type (Vacuum retention type)	B	Normally closed type	C	Normally open type
K	Combination of different value unit type on a manifold (Fill in the details on Specification Order Form)				

② Vacuum port (Applicable tube size)

Code	04	06	08
Tube dia.(mm)	ø4	ø6	ø8

00 : When different vacuum ports are mixed on a manifold (Fill in the details on Specification Order Form)

③ Air supply port (Applicable tube size)

Code	04	06	08	10
Tube dia.(mm)	ø4(※1)	ø6	ø8(※2)	ø10(※2)

※1. Stand-alone type only.
※2. Manifold type only.

④ Exhaust port (Applicable tube size)

Code	06	08	10
Tube dia.(mm)	ø6	ø8	ø10(※1)

⑤ Vacuum supply port (Applicable tube size)

Code	04	06	08	10
Tube dia.(mm)	ø4(※1)	ø6	ø8(※2)	ø10(※2)

※1. Stand-alone type only.
※2. Manifold type only.

⑥ Solenoid valve type

Code	D24	A100
Voltage	DC24V	AC100V

⑦ Wire lead-out direction

Code	L	S	K
lead-out direction	Top	Side	Different lead-out directions are mixed on a manifold (Fill in the details on Specification Order Form)

⑧ No. of stations (Only for manifold type)

Code	02	03	04	05	06	07	08	09	10
No. of stations	2	3	4	5	6	7	8	9	10

⑨ Lead-out direction of air-supply, exhaust, & vacuum-supply ports (Only for manifold type)

Code	A	B
Lead-out direction	Vacuum port side	Solenoid valve side

⑩ Vacuum switch

Code	W	A	K	No code
Switch	2 switch output	1 switch output and 1 analog output	When different vacuum switches are mixed on a manifold (Fill in the details on Specification Order Form)	Without vacuum switch

Order Example

1 Exteral vacuum controller stand-alone type

VJP A - 04 04 06 - D24 L - W
① ② ③ ⑤ ⑥ ⑦ ⑩

① Suction on/off solenoid valve unit type :
A → Double solenoid type (Vacuum retention type)
② Vacuum port: **04** → ø4mm Push-In Fitting
③ Air supply port: **04** → ø4mm Push-In Fitting
⑤ Vacuum supply port: **06** → ø6mm Push-In Fitting
⑥ Solenoid valve type: **D24** → 24VDC
⑦ Wire lead-out direction: **L** → Top
⑩ Vacuum switch: **W** → 2 switch output

2 External vacuum controller manifold type

VJP A - 04 08 08 10 - D24 L - 04 A - W
① ② ③ ④ ⑤ ⑥ ⑦ ⑧ ⑨ ⑩

① Suction on/off solenoid valve unit type :
A → Double solenoid type (Vacuum retention type)
② Vacuum port: **04** → ø4mm Push-In Fitting
③ Air supply port: **08** → ø8mm Push-In Fitting
④ Exhaust port: **08** → ø8mm Push-In Fitting
⑤ Vacuum supply port: **10** → ø10mm Push-In Fitting
⑥ Solenoid valve type: **D24** → 24VDC
⑦ Wire lead-out direction: **L** → Top
⑧ No. of stations: **04** → 4 stations
⑨ Lead-out direction of air-supply, exhaust, & vacuum-supply ports: **A** → Vacuum port side
⑩ Vacuum switch: **W** → 2 switch output

3 External vacuum controller manifold type
(When any one of mounting units has a different specification on a manifold)

VJP K - 00 10 10 10 - D24 L - 05 A - K
① ② ③ ④ ⑤ ⑥ ⑦ ⑧ ⑨ ⑩

① Suction on/off solenoid valve unit type:
K → St.1, St.2 and St.3: Double solenoid type (Vacuum retention type)
St.4, St.5: Normally closed type
② Vacuum port: **00** → St.1, St.2 and St.3: ø4mm Push-In Fitting
St.4, St.5: ø8mm Push-In Fitting
③ Air supply port: **10** → ø10mm Push-In Fitting
④ Exhaust port: **10** → ø10mm Push-In Fitting
⑤ Vacuum supply port: **10** → ø10mm Push-In Fitting
⑥ Solenoid valve type: **D24** → 24VDC
⑦ Wire lead-out direction: **L** → Top
⑧ No. of stations: **05** → 5 stations
⑨ Lead-out direction of air-supply, exhaust, & vacuum-supply ports: **A** → Vacuum port side
⑩ Vacuum switch: **K** → St.1, St.2 and St.3: 2 switch output
St.4: Without vacuum switch
St.5: 1 switch output and analog output.

■ Specification Order Form(In case of order example of 3 in the left page)

			Valve unit type ①	Vacuum port ②	Air supply port ③	Exhaust port ④	Vacuum supply port ⑤	Solenoid valve type ⑥	Wire lead-out direction ⑦	No. of stations ⑧	Lead-out direction of PS & EX ports ⑨	Vacuum switch ⑩
Manifold type	VJP		K —	00	10	10	10 —	D24	L —	05	A —	K
Mounting unit model code	L ⬆ St. no. ⬇ R	St.1	A	06								W
		St.2	St.1									
		St.3	St.1									
		St.4	B	08								
		St.5	B	08								A
		St.6										
		St.7										
		St.8										
		St.9										
		St.10										

※ When the top-mounting units for St. 1, St. 2 and St. 3 are of the same specifications as in the above example of specification order form, fill up the St. 1 space (uppermost) only, while entering"St. 1" in each of the St. 2 and St. 3 grids on the valve unit type column①.

■ Manifold Type Example

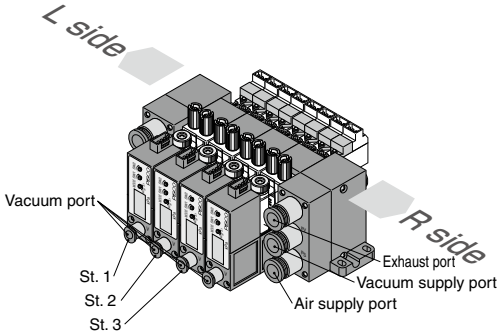

※ Station no. is arranged St.1, St.2 ··· St.10 from L side.

External Vacuum Controller VJP Series Specification Order Form

To: NIHON PISCO CO., Ltd.

Name:

Order No.:

Date:

Request EX-W PISCO Date: Quantity:

			Valve unit type ①	Vacuum port ②	Air supply port ③	Exhaust port ④	Vacuum supply port ⑤	Solenoid valve type ⑥	Wire lead-out direction ⑦	No. of stations ⑧	Lead-out direction of PS & EX ports ⑨	Vacuum switch ⑩
Manifold type	VJP		—				—		—		—	
Mounting unit code	L ⬆ St. no. ⬇ R	St.1										
		St.2										
		St.3										
		St.4										
		St.5										
		St.6										
		St.7										
		St.8										
		St.9										
		St.10										

※. Make a copy of this form and fill in it referring to the example in the previous page.
※. When the combination of mounting unit spec. is different, a separate Specification Order Form is required.

Mechanism of VJP

Example) VJPA-□□□-□□-□□-□ (Valve unit type: Double solenoid type (Vacuum retention type))

① At vacuum generation suspended

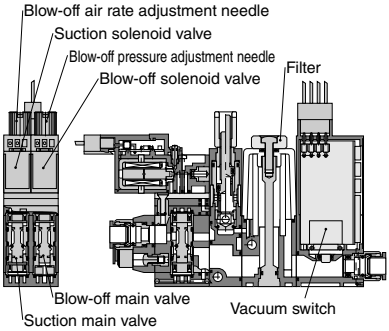

② At vacuum generating

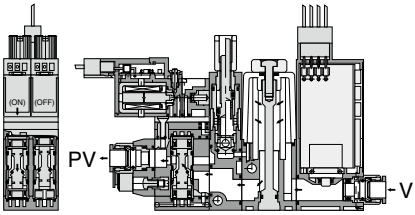

③ At vacuum retention

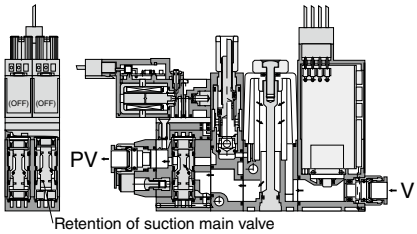

④ At blowing-off

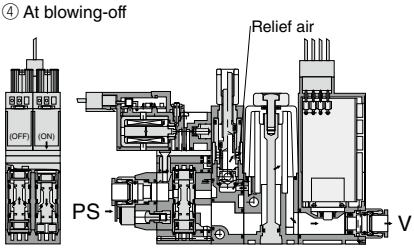

Example) VJPB-□□□-□□-□□-□ (Valve unit type: Normally closed)

① At vacuum generation suspended

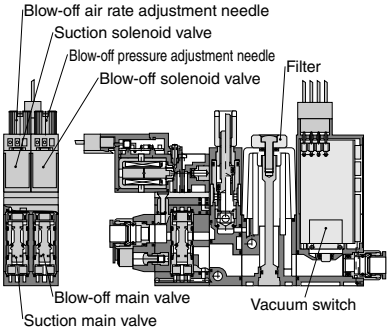

② At vacuum generating

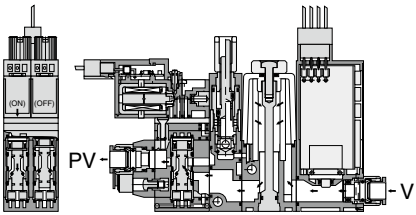

③ At vacuum retention

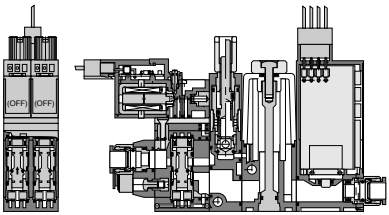

④ At blowing-off

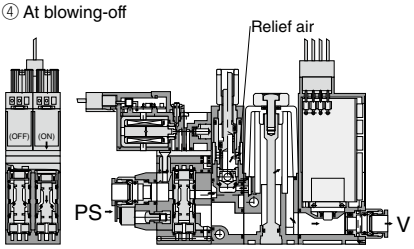

※.V: Vacuum air / PS: Supply air / PV: Vacuum supply air

Specification (Supply pressure)

Fluid medium	Air
Operating pressure range	0.3 ~ 0.7 MPa
Operating temp. range	5 ~ 50°C
Operating vacuum range	0 ~ -100kPa

Solenoid valve (Suction solenoid valve / Blow-off solenoid valve)

Pilot valves

Item	Suction solenoid valve		Blow-off solenoid valve	
Operating system	Direct operation			
Valve construction	Elastic seal, Poppet valve			
Rated voltage	DC24V	AC100V	DC24V	AC100V
Allowable voltage range	DC24V ±10%	AC100V ±10%	DC24V ±10%	AC100V ±10%
Surge protection circuit	Diode	Diode bridge	Diode	Diode bridge
Power consumption	1.2W (With LED)	1.5VA (With LED)	1.2W (With LED)	1.5VA (With LED)
Manual operation	Non-lock push-button type			
Operation indicator	Coil excitation: Red LED ON			
Wire connection method	Connector (Lead wire length: 500mm)			
	Red : DC24V Black : COM	Blue	Red : DC24V Black : COM	Blue

Switchover valve

Item	Suction main valve		Blow-off main valve
Operating system	Pneumatic operation by pilot valve		
Valve construction	Elastic seal, Poppet valve		
Proof pressure	1.05MPa		
Valve unit type	Double solenoid (retention)/ N.C. / N.O.		N.C.
Response time	50msec (Double solenoid type only)		—
Lubrication	Not required		
Effective sectional area	Air supply port (PV) size	ø4mm : 3.5mm²	1mm²
		ø6mm : 5mm²	

Filter specification

Element material	PVF (Polyvinyl formal)	
Filtering capacity	10μm	
Filter area	1,130mm²	
Replacement filter model code	Vacuum filter	VGFE 10
	Blow-off filter	VJFF

Blow-off function

Blow-off air rate	0 ~ 50ℓ/min[ANR] (Rated supply pressure: 0.5Mpa)
Valve structure	Elastic seal, Poppet valve
Relief pressure setting range	0.005 ~ 0.05MPa

Vacuum switch with LED display

Output	2 switch output (-W)	1 switch output and 1 analog output (-A)	
Current consumption	40mA max.		
Pressure detection	Diffused semiconduction pressure switch		
Operating pressure range	0 ~ -100kPa		
Pressure setting range	0 ~ -99kPa		
Proof pressure	0.2MPa		
Operating temp. range	0 ~ 50°C (No freezing)		
Operating humidity range	35 ~ 85%RH (No dew condensation)		
Rated voltage	DC12 ~ 24V ±10%, Ripple(P-P) 10% max.		
Protective structure	IEC standard IP40 equiv.		
No. of pressure setting	2	1	
Operating accuracy	±3%F.S. max. (at Ta=25°C)		
Differential response	Fixed(2%F.S. max.)	Variable (about 0 ~ 15% of set value)	
Switch output	NPN open collector output: 30V 80mA max. Residual voltage 0.8V max.		
Analog output		Output voltage	1 ~ 5V
		Zero-point voltage	1±0.1V
		Span voltage	4±0.1V
		Output current	1mA max. (load resistance 50kΩmax.)
		LIN／HYS	±0.5%F.S. max.
Response time	About 2m·sec. max		
Display	0 ~ -99kPa (2-digit red LED display)		
Display frequency	About 4 times / sec.		
Indication accuracy	±3%F.S. ±2 digit		
Sensor resolution	1 digit		
Operation indicator	SW1: Red LED turns ON, when pressure is above setting.	Red LED turns ON, when pressure is above setting.	
	SW2: Green LED turns ON, when pressure is above setting.		
Function	1. MODE switch (ME / S1 / S2)	1. MODE switch (ME / SW)	
	2. S1 setting trimmer (2/3-rotation trimmer)	2. SW setting trimmer (2/3-rotation trimmer)	
	3. S2 setting trimmer (2/3-rotation trimmer)	3. HYS setting trimmer (About 0-15% of setting value)	

Circuit diagram (Solenoid valve)

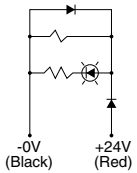

24VDC Supply/Blow-off solenoid valve

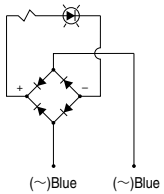

24VDC Supply/Blow-off solenoid valve

VJP Series Weight List

① Stand-alone type

Type	Model code	Weight(g)	Remarks
With vacuum switch	VJP□-□□□□-□□-□	152.0	Vacuum port：ø4, ø6
	VJP□-8□□□-□□-□	158.5	Vacuum port：ø8
Without vacuum switch	VJP□-□□□□-□□	125.5	Vacuum port：ø4, ø6
	VJP□-8□□□-□□	132.0	Vacuum port：ø8

② Manifold intermediate block

	Weight(g)	Remarks
Manifold intermediate block	18.5	Per station

③ Manifold Side block

	Weight(g)	Remarks
External Vacuum Controller	106.0	Cartridge qty: 6pcs

④ Cartridge (Supply and Exhaust ports)

Model code	Weight(g)	Remarks
CJC14-06	11.5	For ø6m
CJC14-08	10.0	For ø8m
CJC14-10	13.0	For ø10m

■ Calculate the total weight by the following calculation formula.

Total weight of manifold type = (①VJP Stand-alone unit + ②Manifold intermediate block) x station qty + ③Manifold Side block + ④Cartridge x qty

How to insert and disconnect

1. How to insert and disconnect tubes

① Tube insertion

Insert a tube into Push-In Fitting of the External Vacuum Controller VJP up to the tube end. Lock-claws bites the tube to fix it automatically and the elastic sleeve seals around the tube.

Refer to "2. Instructions for Tube Insertion" under "Common Safety Instructions for Fittings" .

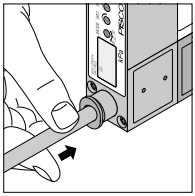

② Tube disconnection

The tube is disconnected by pushing release-ring to release Lock-claws.

Make sure to stop air supply before the tube disconnection.

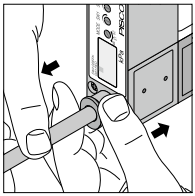

2. How to fix External Vacuum Controller VJP

In order to fix the vacuum controller, tighten M3 threads with tightening torque 0.3-0.35Nm through the fixing holes on the resin body. Refer to the outer dimensional drawings of the hole pitch.

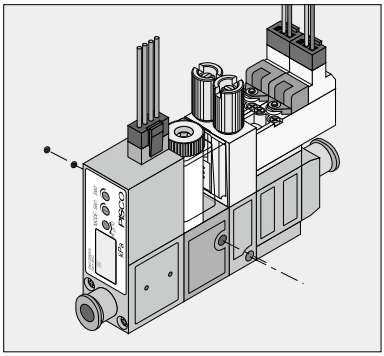

Applicable Tube and Related Products

Polyurethane Tube (1.Piping products catalog P.596)

■ Polyurethane Tube is for the general pneumatic piping and suitable for a compact piping.

Nylon Tube (1.Piping products catalog P.608)

■ Nylon Tube is for the general pneumatic piping and suitable for a high-pressure fluid up to 1.5MPa (NB tube: 1.0MPa).

Vacuum Tube (1.Piping products catalog P.612)

■ Vacuum Tube is a ultra-soft tube and suitable for piping of vacuum generators or actuators.

Vacuum Pads

Standard Size List

Wire lead-out direction: top or side

Double solenoid type

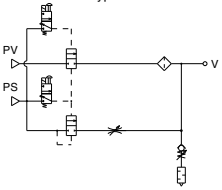

Normally closed type

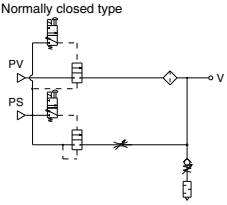

Normally open type

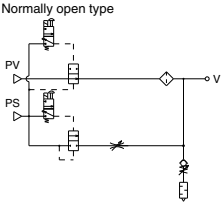

With vacuum switch, Wire lead-out direction: top or side

Double solenoid type

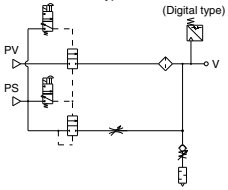

Normally closed type

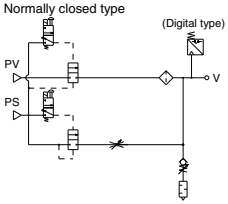

Normally open type

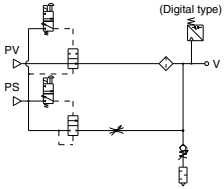

Type	Page to refer	Vacuum port	Air supply port 4mm	Air supply port 6mm	Vacuum supply port
VJP	332	4mm	●	●	8mm
			●	●	With Silencer
		6mm	●	●	8mm
			●	●	With Silencer
		8mm	●	●	8mm
			●	●	With Silencer

Type	Page to refer	Vacuum port	Air supply port 4mm	Air supply port 6mm	Vacuum supply port
VJP	333	4mm	●	●	8mm
			●	●	With Silencer
		6mm	●	●	8mm
			●	●	With Silencer
		8mm	●	●	8mm
			●	●	With Silencer

VJP Wire lead-out direction: Top

Model code

VJP□-□□□-□L

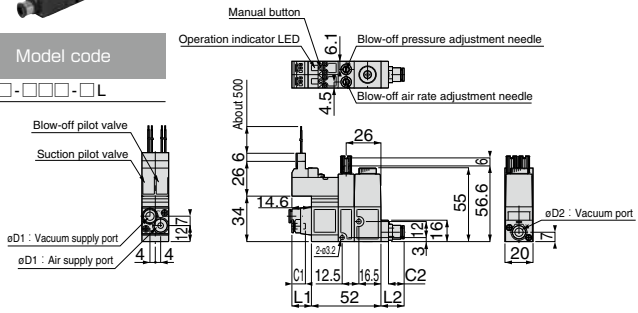

Unit: mm

Air supply port Applicable tube size: øD1	C1	L1
4	11.2	14.6
6	11.7	17.1

Unit: mm

Vacuum port Applicable tube size: øD2	C2	L2
4	10.9	14.3
6	11.7	17.2
8	21.7	25.8

Circuit diagram

VJPA…(Double solenoid stand-alone type)

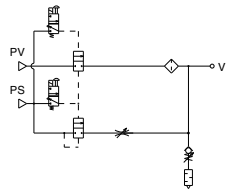

VJPB…(Normally closed stand-alone type)

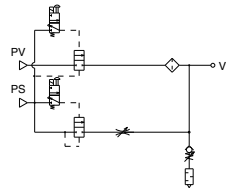

VJPC…(Normally open stand-alone type)

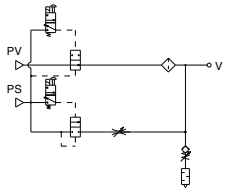

VJP Wire lead-out direction: Side

Model code

VJP□-□□□-□S

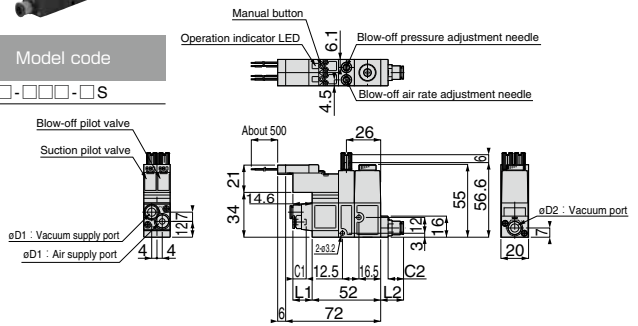

Unit: mm

Air supply port Applicable tube size: øD1	C1	L1
4	11.2	14.6
6	11.7	17.1

Unit: mm

Vacuum port Applicable tube size: øD2	C2	L2
4	10.9	14.3
6	11.7	17.2
8	21.7	25.8

Circuit diagram

See the above circuit diagram for the one for this type.

VJP With vacuum switch, Wire lead-out direction: Top

Model code

VJP□-□□□-□L-□

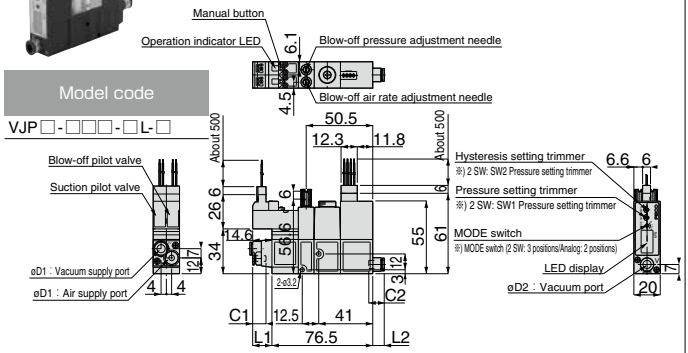

Circuit diagram

VJPA…(Double solenoid stand-alone type)

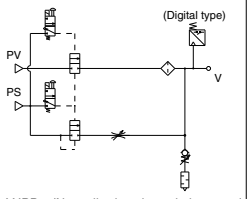

VJPB…(Normally closed stand-alone type)

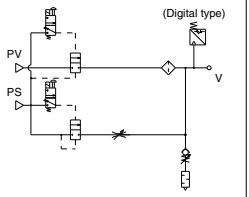

VJPC…(Normally open stand-alone type)

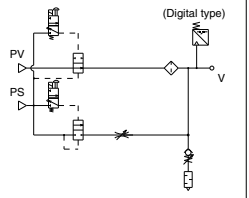

Unit: mm

Air supply port Applicable tube size: øD1	C1	L1
4	11.2	14.6
6	11.7	17.1

Unit: mm

Vacuum port Applicable tube size: øD2	C2	L2
4	10.9	5.8
6	11.7	8.7
8	18.2	17.3

VJP With vacuum switch, Wire lead-out direction: Side

Circuit diagram

See the above circuit diagram for the one for this type.

Model code

VJP□-□□□-□S-□

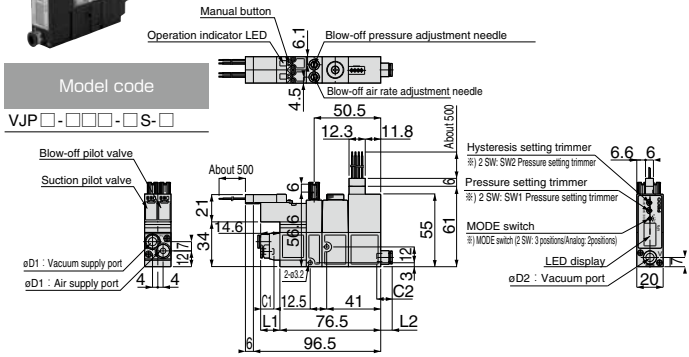

Unit: mm

Air supply port Applicable tube size: øD1	C1	L1
4	11.2	14.6
6	11.7	17.1

Unit: mm

Vacuum port Applicable tube size: øD2	C2	L2
4	10.9	5.8
6	11.7	8.7
8	18.2	17.3

VJP Manifold type, Lead-out direction of PS & EX ports: Vacuum port side

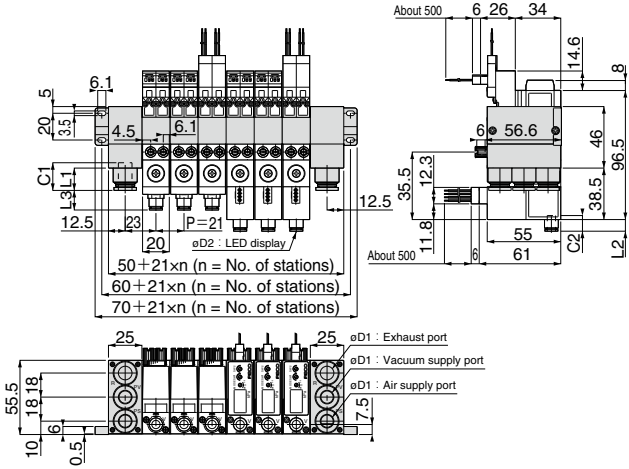

Model code
VJP□-□□□□-□□-□A-□

Unit: mm

Air supply and exhaust ports Applicable tube size: øD1	C1	L1
6	16.95	11.55
8	18.2	13.1
10	20.7	16.7

Unit: mm

Vacuum port Applicable tube size: øD2	C2	L2	L3
4	10.9	5.8	14.3
6	11.7	8.7	17.2
8	18.2	17.3	23.0

VJP Manifold type, Lead-out direction of PS & EX ports: Solenoid valve side

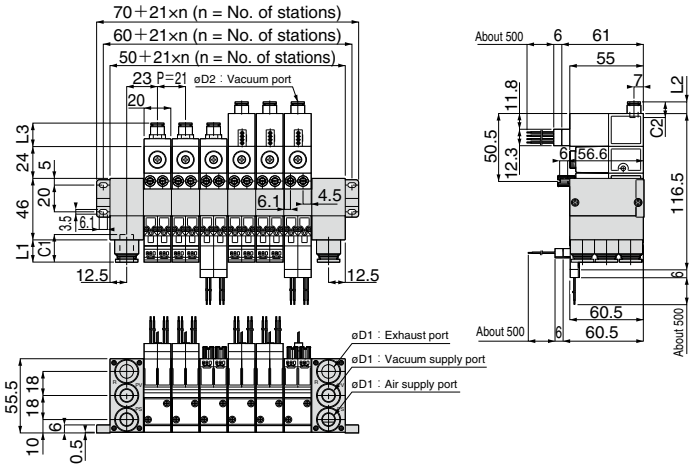

Model code
VJP□-□□□□-□□-□B-□

Unit: mm

Air supply and exhaust ports Applicable tube size: øD1	C1	L1
6	16.95	11.55
8	18.2	13.1
10	20.7	16.7

Unit: mm

Vacuum port Applicable tube size: øD2	C2	L2	L3
4	10.9	5.8	14.3
6	11.7	8.7	17.2
8	18.2	17.3	23.0

⚠ Detailed Safety Instructions

Before using PISCO products, be sure to read "Safety Instructions" and "Safety Instruction Manual" on page 35-39 and "Common Safety Instructions for Vacuum Series" on page 47-49.

Warning

1. Make sure that the leakage current is less than 1mA, when operating a valve unit. Leakage current larger than that may cause malfunction.
2. External vacuum controller with vacuum retention function permits some vacuum leakage. Provide an appropriate safety measure when vacuum retention for long period of time is required.
3. The coil in a pilot solenoid valve generates heat under the following ① to ③ conditions. The heat may cause dropping life cycle, malfunctions and burn or may affect negatively on peripheral machines.
   Contact us when the power is applied to the vacuum generator under the following conditions:
   ① The power is continuously ON for over 2 hours.
   ② High-cycle operation.
   ③ Even when intermittent running of the generator is carried out,, the total operation time per day is longer than non-operation time.
4. When the electricity is applied to valves continuously for a long time, the coils generate heat. It may cause dropping life cycle, malfunctions, getting burnt or damaging peripheral machines due to the heat.
5. Regarding double-solenoid types (VJPA···), the switchover valve (main valve) is placed in neutral after the supply of pilot air has been suspended (the same is true when the valve is being operated for the first time after shipment). When resuming the supply of pilot air, be sure to send a signal to the pilot valve, or conduct switchover operations manually as required.

Caution

1. Do not give an excessive tensile strength and bending on a lead wire. Otherwise, breaking wire or damage on connector may be caused.
2. When manifold type is selected, dropping the performance or having an effect to other vacuum ports can be caused depending on number of stations or a combination of mounting units. Contact us for any unclear points.
3. Compressed air contains many kinds of drains such as water, oxidized oil, tar and other foreign substances. Dehumidify the compressed air by using an after-cooler or a dryer and improve the air condition, since those drains seriously impair the performance of the vacuum generator.
4. Do not use lubricators.
5. Since pipe rust cause malfunctions, a filter finer than 5μm should be placed right before the air supply port.
6. Do not use the vacuum generator under the condition of corrosive and / or inflammable gas. Also do not use these gasses as fluid medium.
7. Do not operate a blow-off valve during vacuum generating.
8. When replacing vacuum port cartridge, first remove any foreign matter clinging to them and the surrounding areas, then firmly insert pins into cartridges.
9. When replacing a supply port block, make sure not to lose the seal rubber and remove the foreign substances stuck around the block. Tighten the screw to fix the block with 0.27-0.3Nm of the tightening torque.

⚠ Safety Rules for Use

■ 1. Safety Rules for Manifold Type → Refer to the precautions for Complex Vacuum Generator VJ on page 184.

■ 2. Vacuum Pressure Sensor (Vacuum switch) with LED display → Refer to the precautions for Complex Vacuum Generator VJ on page 184.

■ 3. How to adjust Relief Valve → Refer to the method for Complex Vacuum Generator VJ on page 185.

■ Replacement of Element

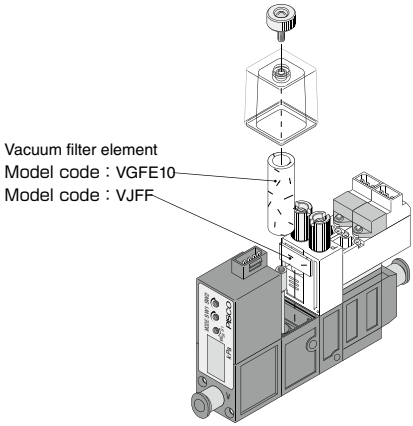

⚠ SAFETY Instructions

This safety instructions aim to prevent personal injury and damage to properties by requiring proper use of PISCO products.

Be certain to follow ISO 4414 and JIS B 8370

ISO 4414 : Pneumatic fluid power…Recomendations for the application of equipment to transmission and control systems.

JIS B 8370 : General rules and safety requirements for systems and their components.

This safety instructions is classified into "Danger", "Warning" and "Caution" depending on the degree of danger or damages caused by improper use of PISCO products.

⚠ Danger	Hazardous conditions. It can cause death or serious personal injury.
⚠ Warning	Hazardous conditions depending on usages. Improper use of PISCO products can cause death or serious personal injury.
⚠ Caution	Hazardous conditions depending on usages. Improper use of PISCO products can cause personal injury or damages to properties.

⚠ Warning

1. Selection of pneumatic products
   ① A user who is a pneumatic system designer or has sufficient experience and technical expertise should select PISCO products.
   ② Due to wide variety of operating conditions and applications for PISCO products, carry out the analysis and evaluation on PISCO products. The pneumatic system designer is solely responsible for assuring that the user's requirements are met and that the application presents no health or safety hazards. All designers are required to fully understand the specifications of PISCO products and constitute all systems based on the latest catalog or information, considering any malfunctions.

2. Handle the pneumatic equipment with enough knowledge and experience
   ① Improper use of compressed air is dangerous. Assembly, operation and maintenance of machines using pneumatic equipment should be conducted by a person with enough knowledge and experience.

3. Do not operate machine / equipment or remove pneumatic equipment until safety is confirmed.
   ① Make sure that preventive measures against falling work-pieces or sudden movements of machine are completed before inspection or maintenance of these machine.
   ② Make sure the above preventive measures are completed. A compressed air supply and the power supply to the machine must be off, and also the compressed air in the systems must be exhausted.
   ③ Restart the machines with care after ensuring to take all preventive measures against sudden movements.

※. This safety instructions are subject to change without notice.

Disclaimer

1. PISCO does not take any responsibility for any incidental or indirect loss, such as production line stop, interruption of business, loss of benefits, personal injury, etc., caused by any failure on use or application of PISCO products.

2. PISCO does not take any responsibility for any loss caused by natural disasters, fires not related to PISCO products, acts by third parties, and intentional or accidental damages of PISCO products due to incorrect usage.

3. PISCO does not take any responsibility for any loss caused by improper usage of PISCO products such as exceeding the specification limit or not following the usage the published instructions and catalog allow.

4. PISCO does not take any responsibility for any loss caused by remodeling of PISCO products, or by combinational use with non-PISCO products and other software systems.

5. The damages caused by the defect of Pisco products shall be covered but limited to the full amount of the PISCO products paid by the customer.

⚠ SAFETY INSTRUCTION MANUAL

PISCO products are designed and manufactured for use in general industrial machines. Be sure to read and follow the instructions below.

⚠ Danger

1. Do not use PISCO products for the following applications.
   ① Equipment used for maintaining / handling human life and body.
   ② Equipment used for moving / transporting human.
   ③ Equipment specifically used for safety purposes.

⚠ Warning

1. Do not use PISCO products under the following conditions.
   ① Beyond the specifications or conditions stated in the catalog, or the instructions.
   ② Under the direct sunlight or outdoors.
   ③ Excessive vibrations and impacts.
   ④ Exposure / adhere to corrosive gas, inflammable gas, chemicals, seawater, water and vapor. *
   ＊Some products can be used under the condition above(④), refer to the details of specification and condition of each product.
2. Do not disassemble or modify PISCO products, which affect the performance, function, and basic structure of the product.
3. Turn off the power supply, stop the air supply to PISCO products, and make sure there is no residual air pressure in the pipes before maintenance and inspection.
4. Do not touch the release-ring of push-in fitting when there is a working pressure. The lock may be released by the physical contact, and tube may fly out or slip out.
5. Frequent switchover of compressed air may generate heat, and there is a risk of causing burn injury.
6. Avoid any load on PISCO products, such as a tensile strength, twisting and bending. Otherwise, there is a risk of causing damage to the products.
7. As for applications where threads or tubes swing / rotate, use Rotary Joints, High Rotary Joints or Multi-Circuit Rotary Block only. The other PISCO products can be damaged in these applications.
8. Use only Die Temperature Control Fitting Series, Tube Fitting Stainless SUS316 Series, Tube Fitting Stainless SUS316 Compression Fitting Series or Tube Fitting Brass Series under the condition of over 60℃ (140° F) water or thermal oil. Other PISCO products can be damaged by heat and hydrolysis under the condition above.
9. As for the condition required to dissipate static electricity or provide an antistatic performance, use EG series fitting and antistatic products only, and do not use other PISCO products. There is a risk that static electricity can cause system defects or failures.
10. Use only Fittings with a characteristic of spatter-proof such as Anti-spatter or Brass series in a place where flame and weld spatter is produced. There is a risk of causing fire by sparks.
11. Turn off the power supply to PISCO products, and make sure there is no residual air pressure in the pipes and equipment before maintenance. Follow the instructions below in order to ensure safety.
    ① Make sure the safety of all systems related to PISCO products before maintenance.
    ② Restart of operation after maintenance shall be proceeded with care after ensuring safety of the system by preventive measures against unexpected movements of machines and devices where pneumatic equipment is used.
    ③ Keep enough space for maintenance when designing a circuit.
12. Take safety measures such as providing a protection cover if there is a risk of causing damages or fires on machine / facilities by a fluid leakage.

⚠ Caution

1. Remove dusts or drain before piping. They may get into the peripheral machine / facilities and cause malfunction.
2. When inserting an ultra-soft tube into push-in fitting, make sure to place an Insert Ring into the tube edge. There is a risk of causing the escape of tube and a fluid leakage without using an Insert Ring.
3. The product incorporating NBR as seal rubber material has a risk of malfunction caused by ozone crack. Ozone exists in high concentrations in static elimination air, clean-room, and near the high-voltage motors, etc. As a countermeasure, material change from NBR to HNBR or FKM is necessary. Consult with PISCO for more information.
4. Special option "Oil-free" products may cause a very small amount of a fluid leakage. When a fluid medium is liquid or the products are required to be used in harsh environments, contact us for further information.
5. In case of using non-PISCO brand tubes, make sure the tolerance of the outer tube diameter is within the limits of Table 1.

●Table 1. Tube O.D. Tolerance

mm size	Nylon tube	Polyurethane tube
ø1.8mm	—	±0.05mm
ø3mm	—	±0.15mm
ø4mm	±0.1mm	±0.15mm
ø6mm	±0.1mm	±0.15mm
ø8mm	±0.1mm	±0.15mm
ø10mm	±0.1mm	±0.15mm
ø12mm	±0.1mm	±0.15mm
ø16mm	±0.1mm	±0.15mm

inch size	Nylon tube	Polyurethane tube
ø1/8	±0.1mm	±0.15mm
ø5/32	±0.1mm	±0.15mm
ø3/16	±0.1mm	±0.15mm
ø1/4	±0.1mm	±0.15mm
ø5/16	±0.1mm	±0.15mm
ø3/8	±0.1mm	±0.15mm
ø1/2	±0.1mm	±0.15mm
ø5/8	±0.1mm	±0.15mm

6. Instructions for Tube Insertion
   ① Make sure that the cut end surface of the tube is at right angle without a scratch on the surface and deformations.
   ② When inserting a tube, the tube needs to be inserted fully into the push-in fitting until the tubing edge touches the tube end of the fitting as shown in the figure below. Otherwise, there is a risk of leakage.

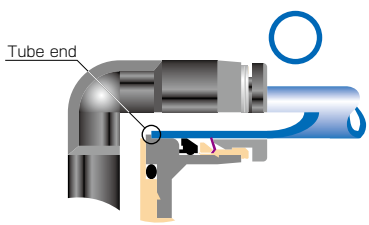

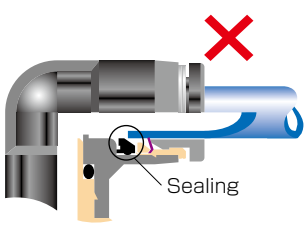

Tube is not fully inserted up to tube end.

   ③ After inserting the tube, make sure it is inserted properly and not to be disconnected by pulling it moderately.
   ※. When inserting tubes, Lock-claws may be hardly visible in the hole, observed from the front face of the release-ring. But it does not mean the tube will surely escape. Major causes of the tube escape are the followings;
   ①Shear drop of the lock-claws edge
   ②The problem of tube diameter (usually small)
   Therefore, follow the above instructions from ① to ③, even lock-claws is hardly visible.

7. Instructions for Tube Disconnection
   ① Make sure there is no air pressure inside of the tube, before disconnecting it.
   ② Push the release-ring of the push-in fitting evenly and deeply enough to pull out the tube toward oneself. By insufficient pushing of the release-ring, the tube may not be pulled out or damaged by scratch, and tube shavings may remain inside of the fitting, which may cause the leakage later.
8. Instructions for Installing a fitting
   ① When installing a fitting, use proper tools to tighten a hexagonal-column or an inner hexagonal socket. When inserting a hex key into the inner hexagonal socket of the fitting, be careful so that the tool does not touch lock-claws. The deformation of lock-claws may result in a poor performance of systems or an escape of the tube.
   ② Refer to Table 2 which shows the recommended tightening torque. Do not exceed these limits to tighten a thread. Excessive tightening may break the thread part or deform the gasket and cause a fluid leakage. Tightening thread with tightening torque lower than these limits may cause a loosened thread or a fluid leakage.
   ③ Adjust the tube direction while tightening thread within these limits, since some PISCO products are not rotatable after the installation.

●Table 2: Recommended tightening torque / Sealock color / Gasket materials

Thread type	Thread size	Tightening torque	Sealock color	Gasket materials
Metric thread	M3 × 0.5	0.7N·m	—	SUS304 NBR
	M5 × 0.8	1.0 ~ 1.5N·m		
	M6 × 1	2 ~ 2.7N·m		
	M3 × 0.5	0.5 ~ 0.6N·m		POM
	M5 × 0.8	1 ~ 1.5N·m		
	M6 × 0.75	0.8 ~ 1N·m		
	M8 × 0.75	1 ~ 2N·m		
Taper pipe thread	R1/8	7 ~ 9N·m	White	—
	R1/4	12 ~ 14N·m		
	R3/8	22 ~ 24N·m		
	R1/2	28 ~ 30N·m		
Unified thread	No.10-32UNF	1.0 ~ 1.5N·m	—	SUS304、NBR
National pipe thread taper	1/16-27NPT	7 ~ 9N·m	White	—
	1/8-27NPT	7 ~ 9N·m		
	1/4-18NPT	12 ~ 14N·m		
	3/8-18NPT	22 ~ 24N·m		
	1/2-14NPT	28 ~ 30N·m		

※ These values may differ for some products. Refer to each specification as well.

9. Instructions for removing a fitting
   ① When removing a fitting, use proper tools to loosen a hexagonal-column or an inner hex bolt.
   ② Remove the sealant stuck on the mating equipment. The remained sealant may get into the peripheral equipment and cause malfunctions.
10. Arrange piping avoiding any load on fittings and tubes such as twist, tensile, moment load, shaking and physical impact. These may cause damages to fittings, tube deformations, bursting and the escape of tubes.

⚠ Common Safety Instructions for Vacuum Series

Before selecting or using PISCO products, read the following instructions. Read the detailed instructions for individual series.

⚠ Warning

1. If there is a risk of dropping work-pieces during vacuum suction, take a safety measure against the falling of them.
2. Avoid supplying more than 0.1MPa pressure constantly in a vacuum circuit. Since vacuum generators are not explosive-proof, there is a risk of damaging the products.
3. Pay attention to drop of vacuum pressure caused by problems of the supplied air or the power supply. Decrease of suction force may lead to a danger of falling work-piece so that safety measure against the falling of them is necessary.
4. When more than 2 vacuum pads are plumbed on a single ejector and one of them has a suction problem such as vacuum leak, there is a risk of releasing work-pieces from the other pad due to the drop of the vacuum pressure.
5. Do not use in the way by which exhaust port is blocked or exhaust resistance is increased. Otherwise, there is a risk of no vacuum generation or a drop of the vacuum pressure.
6. Do not use the product in the circumstance of corrosive gas, inflammable gas, explosive gas, chemicals, seawater and vapor or do not expose the product to those. Never allow the product to suck those things.
7. Provide a protective cover on the products when it is exposed to sunlight.
8. Carry out clogging check for silencer element in an ejector and a vacuum filter periodically. Clogged element will be a cause to impair the performance or a cause of troubles.
9. Before replacing the element, thoroughly read and understand the method of filter replacement in the catalog.
10. Make sure the correct port of the vacuum generator by this catalog or marking on the products when plumbing. Wrong plumbing can be a risk to damage the product.
11. Supply clean air without sludge or dusts to an ejector. Do not lubricate by a lubricator. There is a risk of malfunction or performance impairing by impurities and oil contained in the compressed air.
12. Do not apply extreme tension, twist or bending forces on a lead wire. Otherwise, it may cause a wire breaking.
13. Locknut needs to be tightened firmly by hand. Do not use any tool to tighten. In case of using tools to tighten the locknut, it may damage the locknut or the product. Inadequate tightening may loosen the locknut and the initial setting can be changed.
14. Do not force the product to rotate or swing even its resin body is rotatable. It may cause damage to the product and a fluid leakage.
15. Do not supply an air pressure or a dry air to the products over the necessary amount. There is a risk of deteriorating rubber materials and malfunction due to oil.
16. Keep the product away from water, oil drops or dusts. These may cause malfunction. Take a proper measure to protect the product before the operation.

17. Do not use the product in the environment of inflammable or explosive gas / fluid. It can cause a fire or an explosion hazard.
18. Do not use the product in the circumstance of corrosive gas, inflammable gas, explosive gas, chemicals, seawater and vapor or do not expose the product to those. Otherwise, it may be a cause of malfunction.
19. Do not clean or paint the products by water or a solvent.

⚠ Caution

1. Operating pressure range in the catalog is the values during ejector operation. Secure the described value of the supplied air, taking a drop of the pressure into consideration. Insufficient pressure, which does not satisfy the spec, may cause abnormal noise, unstable performance and may negatively affect sensors, bringing troubles at last.
2. Effective cross-section area of the air supply side needs to be three times as large as effective cross-section area of the nozzle bore. When arranging piping or selecting PISCO products, secure required effective cross-section area. Insufficient supply pressure may be a cause to impair performance.
3. A Shorter distance of plumbing with a wider bore is preferable at vacuum system side. A long plumbing with a small bore may result in slow response time at the time of releasing work-piece as well as in failure to secure adequate suction flow rate.
4. Plumb a vacuum switch and an ejector with vacuum switch at the end of vacuum system as much as possible. A long distance between a vacuum switch and a vacuum system end may increase plumbing resistance which may lead to a high vacuum level at the sensor even when no suctioning and a malfunction of vacuum switch. Make sure to evaluate the products in an actual system.
5. Refer to “4. Instructions for Installing a fitting” and “5. Instructions for Removing a fitting” under “Common Safety Instructions for Fittings” , when installing or removing Fittings.
6. Refer to “Common Safety Instructions for Pressure Sensors” and “Detailed Safety Instructions” for the handling of digital vacuum switch sensor.
7. Refer to “Common Safety Instructions for Mechanical Vacuum Sensor” for the handling of mechanical vacuum switch.
8. The material of plastic filter cover for VG, VK, VJ, VZ and VX series is PCTG. Avoid the adherence of Chemicals below to the products, and do not use them under those chemical environments.

● Table Chemical Name

Chemical Name
Thinner
Carbon tetrachloride
Chloroform
Acetate
Aniline
Cyclohexane
Trichloroethylene
Sulfuric acid
Lactic acid
Water soluble cutting oil (alkaline)

* There are more chemicals which should be avoided. Contact us for the use under chemical circumstance.

9. The material of plastic filter cover for VQ and VFU series is PA. Avoid the adherence of chemicals below to the products, and do not use them under those chemical environments.

● Table Chemical Name

Chemical Name
Methanol
Ethanol
Nitric acid
Sulfuric acid
Hydrochloric acid
Lactic acid
Acetone
Chloroform
Aniline
Trichloroethylene
Hydrogen peroxide

* There are more chemicals which should be avoided. Contact us for the use under chemical circumstance.

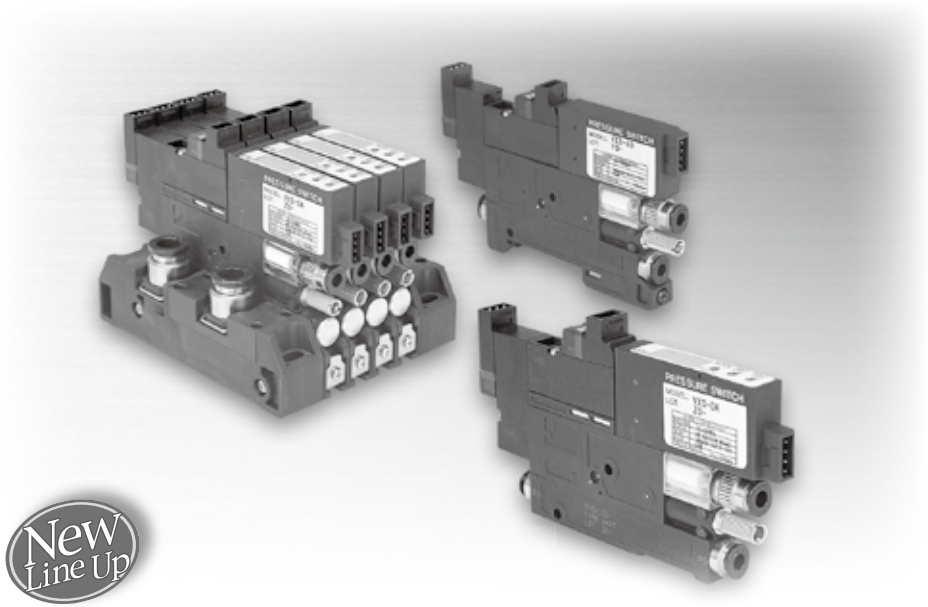

External Vacuum Controller with Compact Body, Lightweight and High Vacuum Cycle

External Vacuum Controller VXP/VXPT

● *The 3-port specification, VXPT, has adopted a three-way vacuum supply main valve, then blow-off time is drastically shortened.*

Three-port specification has been added to the lineup of external vacuum controller. By adopting a three-way vacuum supply main valve, blow-off time is drastically shortened. Since the conventional two-way valve (VXP type) operates to maintain the vacuum immediately after the main valve is shut off, only blow-off air contributes to releasing vacuum. In the newly commercialized three-port specification (VXPT type), however, the atmospheric pressure is introduced when shutting off the main valve to break vacuum using the atmospheric pressure plus blow-off air.

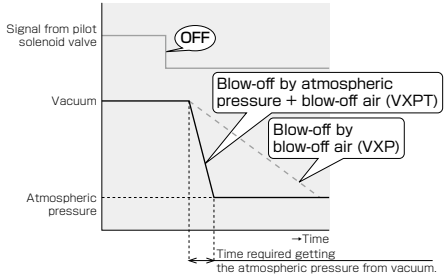

Characteristics

- *Lightweight and compact body meeting market needs.*

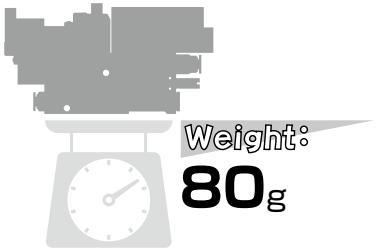

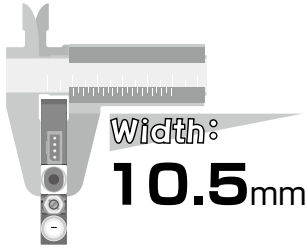

※ The above weight is the value for an ejector with a pressure sensor.

- *The response characteristics of each type are maximized, to realize a high-cycle vacuum system.*

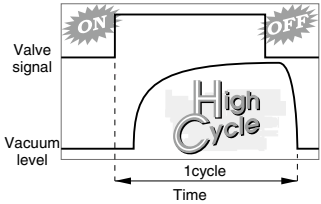

- *Wide variety of combinations enables to meet various applications. Complex Vacuum Generator VX Series is also available. (P.188).*

- *2 installation methods are selectable. Direct-installation type is to fix the product from side using threads. The other DIN rail type is to mount the product on DIN rail. Selection according to the application is possible.*

Direct-installation type

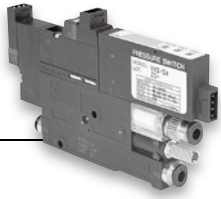

DIN rail type

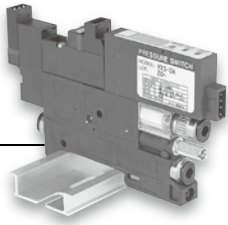

- *Vacuum switch with visibility improved LED display and one with analog output with reasonable price are selectable.*

There are 2 kinds in vacuum switch with LED display. One is 2 switch output and the other is analog output type.
Connector wire is adopted which makes wiring layout easy.

- *Max. 10 mounting units in a manifold type.*

Check! *"Copper alloy free" and " Low level ozone proof" types are available in VXP.*

No copper alloy in metal parts. HMBR material for seal rubber.

Piping Example

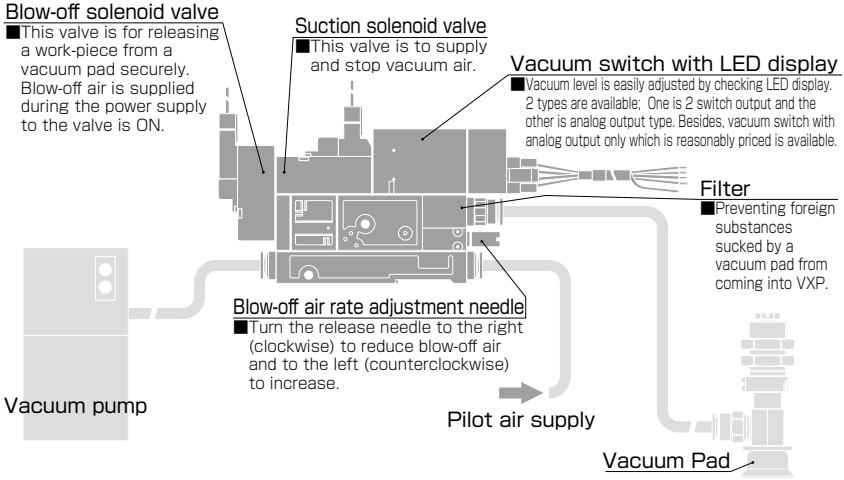

Model Designation of Stand-Alone Type (Example)

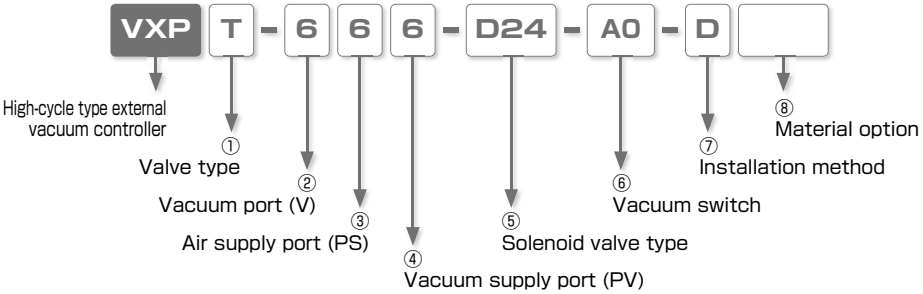

① Valve type

Code	Valve type	Code	Valve type
T	3 port valve	No code	2 port valve

② Vacuum port (V) (Applicable tube size)

Code	3	4	6
Tube dia.(mm)	ø3 (Push-In Fitting)	ø4 (Push-In Fitting)	ø6 (Push-In Fitting)

③ Air supply port (PS) (Applicable tube size)

Code	3	4	6
Tube dia.(mm)	ø3 (Push-In Fitting)	ø4 (Push-In Fitting)	ø6 (Push-In Fitting)

④ Vacuum supply port (PV) (Applicable tube size)

Code	3	4	6
Tube dia.(mm)	ø3 (Push-In Fitting)	ø4 (Push-In Fitting)	ø6 (Push-In Fitting)

⑤ Solenoid valve type

Code	D24	A100
Voltage	DC24V	AC100V

⑥ Vacuum switch

Code	Switch	Code	Switch	Code	Switch
DW	Pressure sensor with LED pressure indicator (2 switch outputs)	DA	Pressure sensor with LED pressure indicator (Analog and switch output)	A0	Analog output pressure sensor (No LED)
No code	Without vacuum switch				

⑦ Installation method

Code	Installation method	Code	Installation method
D	DIN rail type	No code	Direct-installation type

⑧ Material option

Code	No code	-S3
Material	Standard	No copper alloy & HNBR seal
Valve type	2 port valve & 3 port valve	2 port valve

※. Electric components, lead wires and vacuum/air supply ports ø3mm are not -S3 specification.

※. Double solenoid type is not available for solenoid valve.

Model Designation of Manifold Type (Example)

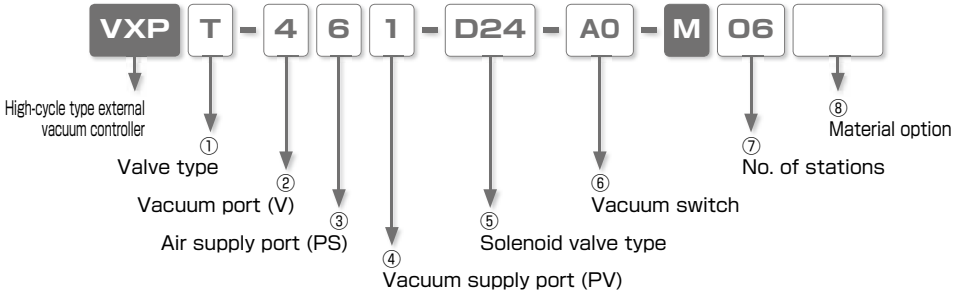

① Valve type

Code	Valve type	Code	Valve type
T	3 port valve	No code	2 port valve
K	When different valve types are mixed on a manifold (Fill in the details on Specification Order Form)		

② Vacuum port (V) (Applicable tube size)

Code	3	4	6	0
Tube dia.(mm)	ø3 (Push-In Fitting)	ø4 (Push-In Fitting)	ø6 (Push-In Fitting)	When different vacuum ports are mixed on a manifold (Fill in the details on Specification Order Form)

③ Air supply port (PS) (Applicable tube size)

Code	4	6	8	1
Tube dia.(mm)	ø4 (Push-In Fitting)	ø6 (Push-In Fitting)	ø8 (Push-In Fitting)	ø10 (Push-In Fitting)

④ Vacuum supply port (PV) (Applicable tube size)

Code	4	6	8	1
Tube dia.(mm)	ø4 (Push-In Fitting)	ø6 (Push-In Fitting)	ø8 (Push-In Fitting)	ø10 (Push-In Fitting)

⑤ Solenoid valve type

Code	D24	A100
Voltage	DC24V	AC100V

⑥ Vacuum switch

Code	Switch	Code	Switch	Code	Switch
DW	Pressure sensor with LED pressure indicator (2 switch outputs)	DA	Pressure sensor with LED pressure indicator (Analog and switch output)	A0	Analog output pressure sensor (No LED)
No code	Without vacuum switch				

⑦ No. of stations

Code	02	03	04	05	06	07	08	09	10
No. of stations	2	3	4	5	6	7	8	9	10

⑧ Material option

Code	No code	-S3
Material	Standard	No copper alloy & HNBR seal
Valve type	2 port valve & 3 port valve	2 port valve

※ . Electric components, lead wires and vacuum/air supply ports ø3mm are not -S3 specification.

※ 1. Double solenoid type is not available for solenoid valve as same as VXP Stand-alone type.
※ 2. When 10 or more stations on a unit is required, contact us in advance.

Model Designation of Manifold-base Only (Example)

VXM - 8 6 - 05 [ ]

- VXM: Manifold only for High-cycle type external vacuum controller
- ① Vacuum supply port (PV)
- ② Air supply port
- ③ No. of stations
- ④ Material option

① Vacuum supply port (PV) (Applicable tube size)

Code	4	6	8	1
Tube dia.(mm)	ø4 (Push-In Fitting)	ø6 (Push-In Fitting)	ø8 (Push-In Fitting)	ø10 (Push-In Fitting)

② Air supply port (PS) (Applicable tube size)

Code	4	6	8	1
Tube dia.(mm)	ø4 (Push-In Fitting)	ø6 (Push-In Fitting)	ø8 (Push-In Fitting)	ø10 (Push-In Fitting)

③ No. of stations

Code	02	03	04	05	06	07	08	09	10
No. of stations	2	3	4	5	6	7	8	9	10

④ Material option

Code	No code	-S3
Material	Standard	No copper alloy & HNBR seal

Specification Order Form Example of Manifold type

Vacuum generator type		Valve type ①		Vacuum port(V) ②	Air supply port (PS)) ③	Vacuum supply port (PV) ④		Solenoid valve type ⑤		Vacuum switch ⑥		No. of stations ⑦	Material option ⑧
VXP		K	–	0	1	1	–	D24	–	K	–	08	
L	St. 1	T	–	4			–		–	A0	–		
	St. 2	T	–	4			–		–	A0	–		
	St. 3	T	–	4			–		–	A0	–		
➡	St. 4	T	–	4			–		–	A0	–		
St. no.	St. 5	T	–	4			–		–	A0	–		
	St. 6	T	–	4			–		–	A0	–		
⬅	St. 7		–	6			–		–	DA	–		
	St. 8		–	6			–		–	DA	–		
	St. 9		–				–		–		–		
R	St. 10		–				–		–		–		

Manifold Type Example

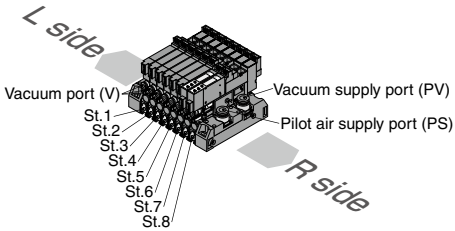

※ Station no. is arranged St.1, St.2 ··· St.10 from L side.

Model Designation of Mounting Unit Type (Example)

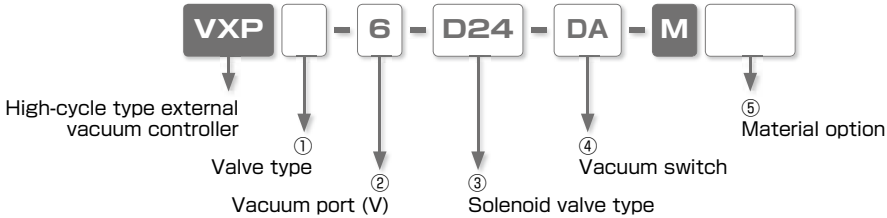

① Valve type

Code	Valve type	Code	Valve type
T	3 port valve	No code	2 port valve

② Vacuum port (V) (Applicable tube size)

Code	3	4	6
Tube dia.(mm)	ø3 (Push-In Fitting)	ø4 (Push-In Fitting)	ø6 (Push-In Fitting)

③ Solenoid valve type

Code	D24	A100
Voltage	DC24V	AC100V

④ Vacuum switch

Code	Switch	Code	Switch	Code	Switch
DW	Pressure sensor with LED pressure indicator (2 switch outputs)	DA	Pressure sensor with LED pressure indicator (Analog and switch output)	A0	Analog output pressure sensor (No LED)
No code	Without vacuum switch				

⑤ Material option

Code	No code	-S3
Material	Standard	No copper alloy & HNBR seal
Valve type	2 port valve & 3 port valve	2 port valve

※. Electric components, lead wires and vacuum/air supply ports ø3mm are not -S3 specification.

Vacuum Controller **VXP/VXPT** Series Specification Order Form

To: NIHON PISCO CO., Ltd.

Name:

Order No.:

Date:

Request EX-W PISCO Date: Quantity:

Valve type		Valve type ①		Vacuum port (V) ②	Air supply port (PS) ③	Vacuum supply port (PV) ④		Solenoid valve type ⑤		Vacuum switch ⑥		No. of stations ⑦	Material option ⑧
VXP			–				–		–		–		
L side	St. 1		–				–		–		–		
⬆	St. 2		–				–		–		–		
	St. 3		–				–		–		–		
	St. 4		–				–		–		–		
St. no.	St. 5		–				–		–		–		
	St. 6		–				–		–		–		
	St. 7		–				–		–		–		
	St. 8		–				–		–		–		
⬇	St. 9		–				–		–		–		
R side	St. 10		–				–		–		–		

※1. Refer to the example on page 343 to fill in the form.
※2. Copy this page and use.
※3. Use this specification order form when ordering different specifications of mounting units.
※4. -S3 specification is not selectable for 3 port specification and a type with vacuum port size with ø3mm.

Construction

Example).VXP-□□□-D24-D□ (2 port valve stand-alone type, Without vacuum switch)

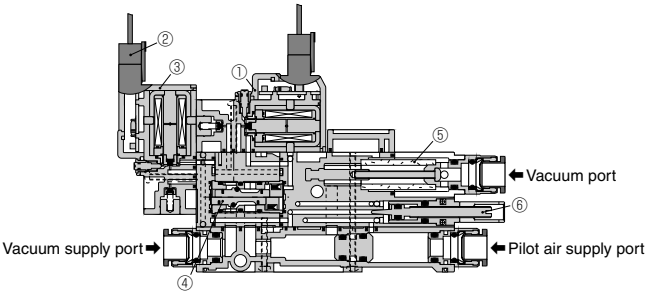

No.	Part name
①	Pilot valve for vacuum supply
②	Connector
③	Blow-off pilot valve
④	Valve unit
⑤	Filter element
⑥	Blow-off air rate adjustment needle

Example).VXP-□□□-D24 (2 port valve stand-alone type, With vacuum switch)

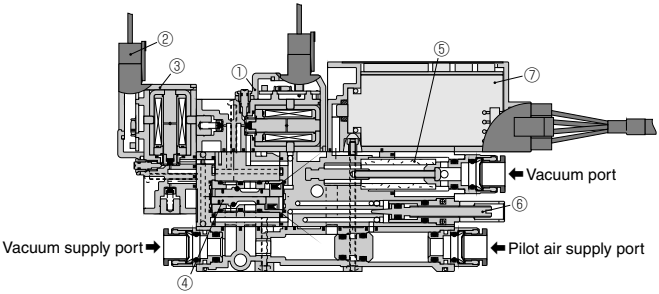

No.	Part name
①	Pilot valve for vacuum supply
②	Connector
③	Blow-off pilot valve
④	Valve unit
⑤	Filter element
⑥	Blow-off air rate adjustment needle
⑦	Sensor unit

Example).VXP□-□□□-□-M□ (2 port valve manifold type, Without vacuum switch)

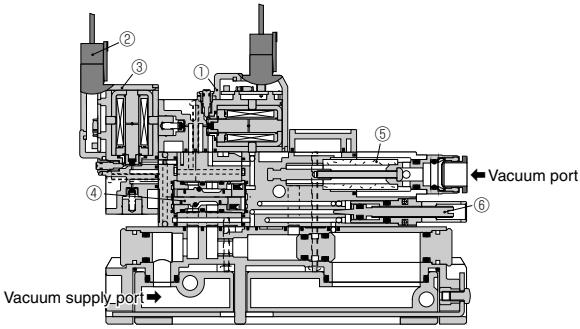

No.	Part name
①	Pilot valve for vacuum supply
②	Connector
③	Blow-off pilot valve
④	Valve unit
⑤	Filter element
⑥	Blow-off air rate adjustment needle

Example).VXP□-□□□-□-D□-M□ (2 port valve manifold type, With vacuum switch)

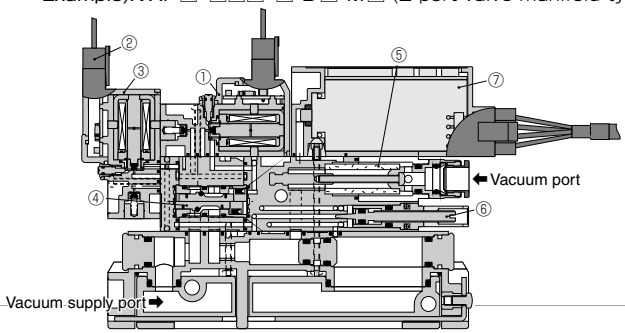

No.	Part name
①	Pilot valve for vacuum supply
②	Connector
③	Blow-off pilot valve
④	Valve unit
⑤	Filter element
⑥	Blow-off air rate adjustment needle
⑦	Sensor unit

Construction

Example).VXPT-□□□-D24-D□ (3 port valve stand-alone type, Without vacuum switch)

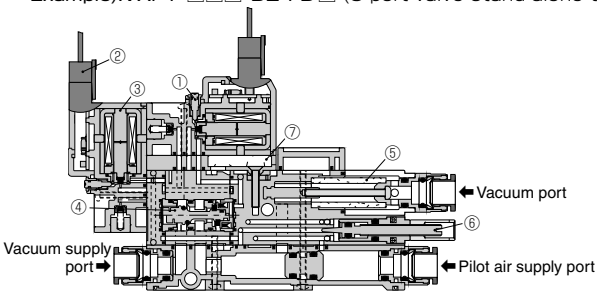

No.	Part name
①	Pilot valve for vacuum supply
②	Connector
③	Blow-off pilot valve
④	Valve unit
⑤	Filter element
⑥	Blow-off air rate adjustment needle
⑦	Filter element for valve

Example).VXPT-□□□-D24 (3 port valve stand-alone type, With vacuum switch)

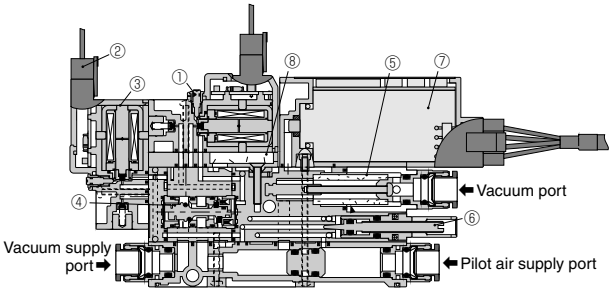

No.	Part name
①	Pilot valve for vacuum supply
②	Connector
③	Blow-off pilot valve
④	Valve unit
⑤	Filter element
⑥	Blow-off air rate adjustment needle
⑦	Sensor unit
⑧	Filter element for valve

Example).VXPT-□□□-□-M□ (3 port valve manifold type, Without vacuum switch)

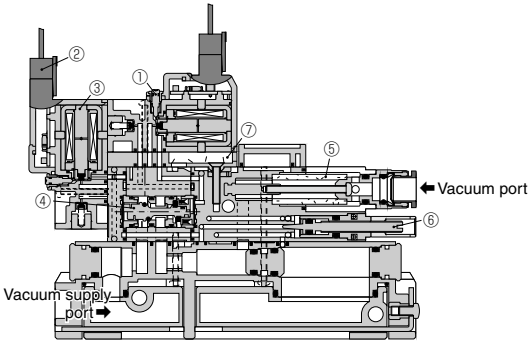

No.	Part name
①	Pilot valve for vacuum supply
②	Connector
③	Blow-off pilot valve
④	Valve unit
⑤	Filter element
⑥	Blow-off air rate adjustment needle
⑦	Filter element for valve

Example).VXPT-□□□-□-D□-M□ (3 port valve manifold type, With vacuum switch)

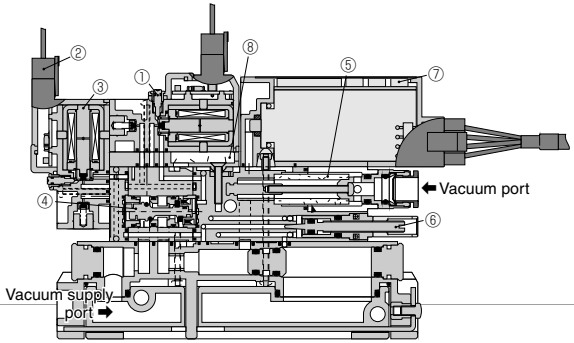

No.	Part name
①	Pilot valve for vacuum supply
②	Connector
③	Blow-off pilot valve
④	Valve unit
⑤	Filter element
⑥	Blow-off air rate adjustment needle
⑦	Sensor unit
⑧	Filter element for valve

Specification (Supply pressure)

Fluid medium	Air
Operating pressure range	0.3 ~ 0.7 MPa
Operating temp. range	5 ~ 50°C
Operating vacuum range	0 ~ -100kPa
Protective structure	IEC standard IP40 equiv.

Solenoid valve

Pilot valves

Item	Suction solenoid valve		Blow-off solenoid valve	
Operating system	Direct operation			
Valve construction	Elastic seal, Poppet valve			
Rated voltage	DC24V	AC100V	DC24V	AC100V
Allowable voltage range	DC24V ±10%	AC100V ±10%	DC24V ±10%	AC100V ±10%
Surge protection circuit	Surge absorber	Diode bridge	Surge absorber	Diode bridge
Power consumption	1.2W (With LED)	1.5VA (LWith LED)	1.2W (With LED)	1.5VA (With LED)
Manual operation	Non-lock push-button type			
Operation indicator	Coil excitation: Red LED ON			
Wire connection method	Connector (Cable length: 500mm)			
	Red：DC24V Black：COM	Blue	Red：DC24V Black：COM	Blue

Switchover valve (VXP type)

Item	Suction main valve
Operating system	Pneumatic operation by pilot valve
Valve construction	Elastic seal, Poppet valve
Proof pressure	1.05MPa
Valve unit type	Normally closed
Lubrication	Not required
Effective sectional area	Air supply port size (PS) ø4mm: 3.5mm², Air supply port size (PS)ø6mm: 4.5mm²
Response time(※)	Normally closed / Vacuum generation (OFF → ON): 7msec, Vacuum operation stop(ON → OFF): 16msec

※. Response time is the time which a pressure change in vacuum port is detected by rated supply pressure (0.5MPa) and rated voltage. Vacuum arrival time and blow-off time up to a vacuum cup depend on ejector, tube length, blow-off air rate, etc.

Main valve (VXPT type)

Item	Suction main valve
Operating system	Pneumatic operation by pilot valve
Valve construction	Elastic seal, Poppet valve
Proof pressure	1.05MPa
Valve unit type	Normally closed
Lubrication	Not required
Effective sectional area	Vacuum supply port size (PV) ø4mm: 3.0mm², Vacuum supply port size (PV) ø6mm: 3.6mm²
Response time(※)	Normally closed / Vacuum generation (OFF → ON): 7msec, Vacuum operation stop(ON → OFF): 16msec

※ . The response time is the time elapsed, at a supply pressure of 0.5MPa and the rated supply voltage, before a change in pressure is detected at the vacuum port. The time required to reach vacuum and the time required to break the vacuum, both measured at the end of the piping (at the work piece),depends on factors such as the volume (piping length) and vacuum breaking (blow-off) air flow.

Vacuum switch

Specification	Vacuum switch with LED display		Vacuum switch without LED display
	2 switch output (–DW)	1 switch output 1 analog output (–DA)	Analog output only (–A0)
Factory default pressure	-50kPa(SW1)、-10kPa(SW2)	-50kPa	
Current consumption	40mA or less		15mA or less
Pressure detection	Diffused semiconduction pressure switch		
Operating pressure range	-100 ~ 0kPa		
Pressure setting range	-99 ~ 0kPa		
Proof pressure	0.2MPa		
Operating temp. range	0 ~ 50°C (No freezing)		
Operating humidity range	35 ~ 85%RH (No dew condensation)		
Power requirements	12 ~ 24VDC ± 10% Ripple (P-P) 10% max.		
Protective structure	IEC standard IP40 equiv		
No. of pressure setting	2	1	
Operating accuracy	±3%F.S. max. (at Ta=25°C)		
Differential response	Fixed(2%F.S. max.)	Variable (About 0-15% of setting value)	
Switch output	NPN open collector output: 30V 80mA max. Residual voltage 0.8V max.		
Analog output		Output voltage	1 ~ 5V
		Zero-point voltage	1±0.1V
		Span voltage	4±0.1V
		Output current	1mA max. (Load resistance: 5kΩ max.)
		LIN／HYS	±0.5%F.S. max.
Display	0 ~ -99kPa (2-digit red LED display)		
Display frequency	About 4 times / sec.		
Indication accuracy	±3%F.S. ±2 digit		
Sensor resolution	1 digit		
Operation indicator	SW1: Red LED turns ON when pressure is above setting.	Red LED turns ON when pressure is above setting.	
	SW2: Green LED turns ON when pressure is above setting.		
Function	1. MODE switch (ME / S1 / S2)	1. MODE switch (ME / SW)	
	2. S1 setting trimmer (2/3-rotation trimmer)	2. SW setting trimmer (2/3-rotation trimmer)	
	3. S2 setting trimmer (2/3-rotation trimmer)	3. HYS setting trimmer (About 0-15% of setting value)	

Filter specification

Element material	PVF（Polyvinyl formal）
Filtering capacity	10μm
Filter area	502mm²
Replacement element model code	VXV010B30

Blow-off air rate

Type	Stand-alone DIN rail type	Manifold type
VXP	0 ~ 11.0ℓ/min[ANR]	
VXPT	0 ~ 7.5ℓ/min[ANR]	

※. The above value is 0.5Mpa of supply pressure.

Stand-Alone Type Weight List

Model code	Unit combinations	Weight(g)
VXP-□□□-□-D□	2 port valve, Pressure sensor with LED display	85
VXP-□□□-□-A0	2 port valve, Pressure sensor with analog output only	82
VXP-□□□-□	2 port valve, without pressure sensor	75
VXPT-□□□-□-D□	3 port valve, Pressure sensor with LED display	88
VXPT-□□□-□-A0	3 port valve, Pressure sensor with analog output only	85
VXPT-□□□-□	3 port valve, without pressure sensor	78

※1. Add 5g for DIN rail type to the above weights.

Manifold Type Weight List

Model code	Mounting unit combinations	Weight(g)
VXP-□□□-□□-D□-M02	2 port valve, Vacuum pressure sensor with LED display, 2 stations	340
VXPT-□□□-□□-D□-M02	3 port valve, Vacuum pressure sensor with LED display, 2 stations	350

※1. Add 95g/station for 2 port valve type. Add 100g/station for 3 port valve type.

※2. The above table represents the weight of pressure sensor with LED display type. Vacuum pressure sensor with analog output type (no indicator) is 3g/station lighter than the above weights. Without vacuum pressure sensor type is 10g/station lighter than the above weights.

How to insert and disconnect

1. How to insert and disconnect tubes

① Tube insertion

Insert a tube into Push-In Fitting of the External Vacuum Controller VXP/VXPT up to the tube end. Lock-claws bites the tube to fix it automatically and the elastic sleeve seals around the tube.

Refer to "2. Instructions for Tube Insertion" under "Common Safety Instructions for Fittings" .

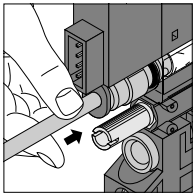

② Tube disconnection

The tube is disconnected by pushing release-ring to release Lock-claws.

Make sure to stop air supply before the tube disconnection.

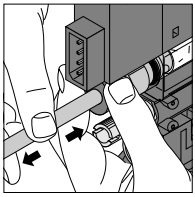

2 How to fix body

① Direct-installation type

Tighten M3 threads with tightening torque 0.3-0.35Nm through the 2 fixing holes on the resin body. Refer to the outer dimensional drawings of the hole pitch.

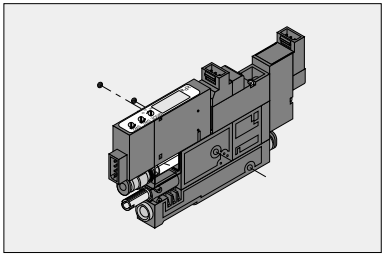

② DIN rail type

Mount the product on a DIN rail and tighten DIN rail fixing screw with tightening torque 0.1-0.15Nm using a proper Phillips screwdriver. When shaking or physical impact on DIN rail is expected, attach commercialized metal stoppers on both sides to fix Din rail.

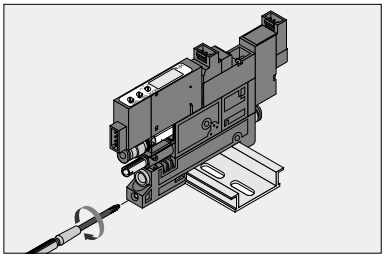

Applicable Tube and Related Products

Polyurethane Tube (1. Piping products catalog P.596)

■ Polyurethane Tube is for the general pneumatic piping and suitable for a compact piping.

Nylon Tube (1. Piping products catalog P.608)

■ Nylon Tube is for the general pneumatic piping and suitable for a high-pressure fluid up to 1.5MPa (NB tube: 1.0MPa).

Vacuum Tube (1. Piping products catalog P.612)

■ Vacuum Tube is a ultra-soft tube and suitable for piping of vacuum generators or actuators.

Vacuum Pads

Standard Size List

2 port valve, Direct-installation type or DIN rail, Without vacuum pressure sensor

Normally closed type

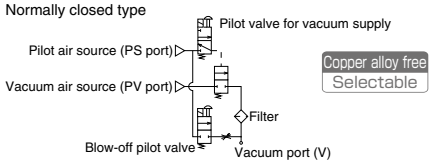

Type	Page to refer	Vacuum port	Air supply port 3mm	Air supply port 4mm	Air supply port 6mm	Vacuum supply port
VXP	354	3mm	●	●	●	3mm
						4mm
						6mm
		4mm	●	●	●	3mm
						4mm
						6mm
		6mm	●	●	●	3mm
						4mm
						6mm

2 port valve, Direct-installation or DIN rail, 2 switch output with LED display

Normally closed type

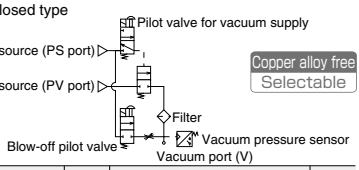

Type	Page to refer	Vacuum port	Air supply port 3mm	Air supply port 4mm	Air supply port 6mm	Vacuum supply port
VXP	355	3mm	●	●	●	3mm
						4mm
						6mm
		4mm	●	●	●	3mm
						4mm
						6mm
		6mm	●	●	●	3mm
						4mm
						6mm

2 port valve, Direct-installation type or DIN rail, 1 switch output and 1 analog output with LED display

Normally closed type

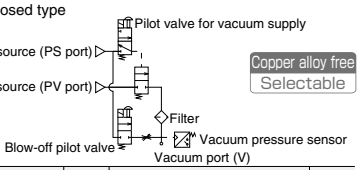

Type	Page to refer	Vacuum port	Air supply port 3mm	Air supply port 4mm	Air supply port 6mm	Vacuum supply port
VXP	356	3mm	●	●	●	3mm
						4mm
						6mm
		4mm	●	●	●	3mm
						4mm
						6mm
		6mm	●	●	●	3mm
						4mm
						6mm

2 port valve, Direct-installation type or DIN rail, analog output pressure sensor

Normally closed type

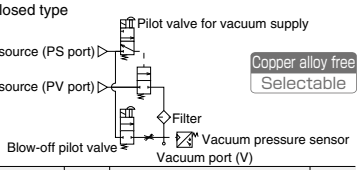

Type	Page to refer	Vacuum port	Air supply port 3mm	Air supply port 4mm	Air supply port 6mm	Vacuum supply port
VXP	357	3mm	●	●	●	3mm
						4mm
						6mm
		4mm	●	●	●	3mm
						4mm
						6mm
		6mm	●	●	●	3mm
						4mm
						6mm

External Vacuum Controller VXP/VXPT Series

3 port valve, Direct-installation type or DIN rail, Without vacuum pressure sensor

Normally closed type

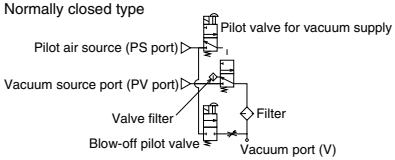

Type	Page to refer	Vacuum port	Air supply port 3mm	Air supply port 4mm	Air supply port 6mm	Vacuum supply port
VXPT	358	3mm	●	●	●	3mm
						4mm
						6mm
		4mm	●	●	●	3mm
						4mm
						6mm
		6mm	●	●	●	3mm
						4mm
						6mm

3 port valve, Direct-installation type or DIN rail, 2 switch output with LED display

Normally closed type

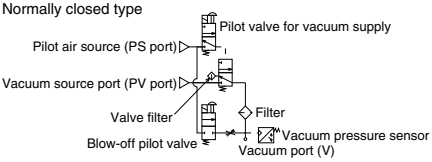

Type	Page to refer	Vacuum port	Air supply port 3mm	Air supply port 4mm	Air supply port 6mm	Vacuum supply port
VXPT	359	3mm	●	●	●	3mm
						4mm
						6mm
		4mm	●	●	●	3mm
						4mm
						6mm
		6mm	●	●	●	3mm
						4mm
						6mm

3 port valve, Direct-installation type or DIN rail, 1 switch output and 1 analog output with LED display

Normally closed type

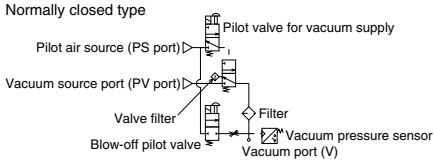

Type	Page to refer	Vacuum port	Air supply port 3mm	Air supply port 4mm	Air supply port 6mm	Vacuum supply port
VXPT	360	3mm	●	●	●	3mm
						4mm
						6mm
		4mm	●	●	●	3mm
						4mm
						6mm
		6mm	●	●	●	3mm
						4mm
						6mm

3 port valve, Direct-installation type or DIN rail, Analog output pressure sensor

Normally closed type

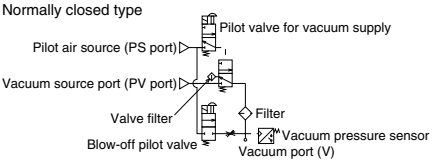

Type	Page to refer	Vacuum port	Air supply port 3mm	Air supply port 4mm	Air supply port 6mm	Vacuum supply port
VXPT	361	3mm	●	●	●	3mm
						4mm
						6mm
		4mm	●	●	●	3mm
						4mm
						6mm
		6mm	●	●	●	3mm
						4mm
						6mm

VXP 2 port valve, Direct-installation type

CAD -2D-

Model code : VXP-□□□-□

※. When "Copper alloy free" is selected, add "-S3" at the end of model code. Please note "Copper alloy free" is not selectable for ø3mm of vacuum port and air supply port.

Copper alloy free
Selectable

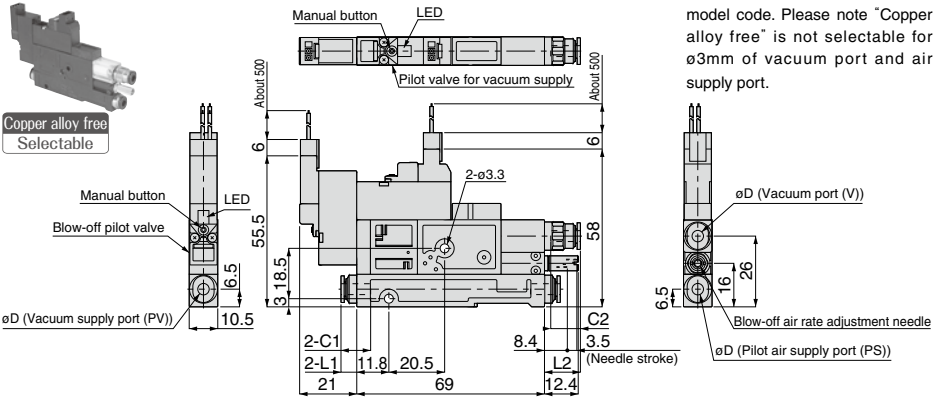

VXP 2 port valve, DIN rail type

CAD -2D-

Model code : VXP-□□□-□-D

※. When "Copper alloy free" is selected, add "-S3" at the end of model code. Please note "Copper alloy free" is not selectable for ø3mm of vacuum port and air supply port.

Copper alloy free
Selectable

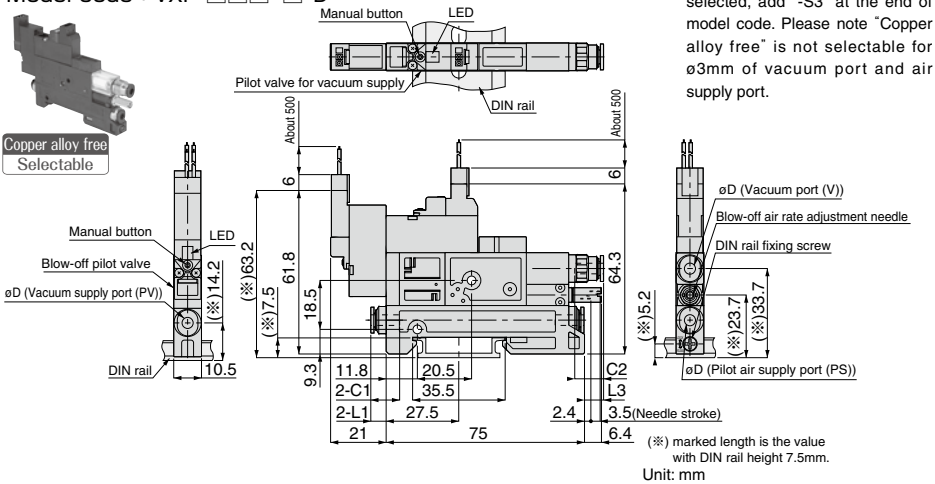

(※) marked length is the value with DIN rail height 7.5mm.

Unit: mm

Common dimension list on this page

Applicable tube O.D(øD)	C1	C2	L1	L2	L3	CAD file name
3	10.9	10.4	5.8	13.2	7.2	–
4	10.9	10.9	5.8	13.2	7.2	VVX-009
6	11.7	11.7	8.7	13.5	7.5	

Common circuit diagram on this page

VXP-□□□-□(-D)(Normally closed type)

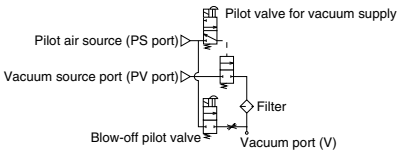

CAD -2D- CAD data is available at PISCO website.

VXP 2 port valve, 2 switch output with LED display, Direct-installation type

CAD 2D

Model code : VXP-□□□-□-DW

※. When "Copper alloy free" is selected, add "-S3" at the end of model code. Please note "Copper alloy free" is not selectable for ø3mm of vacuum port and air supply port.

Copper alloy free Selectable

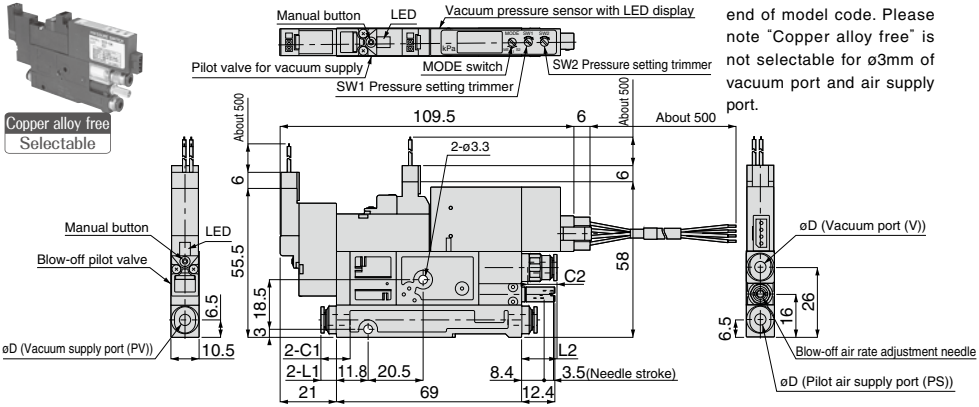

VXP 2 port valve, 2 switch output with LED display, DIN rail type

CAD 2D

Model code : VXP-□□□-□-DW-D

※. When "Copper alloy free" is selected, add "-S3" at the end of model code. Please note "Copper alloy free" is not selectable for ø3mm of vacuum port and air supply port.

Copper alloy free Selectable

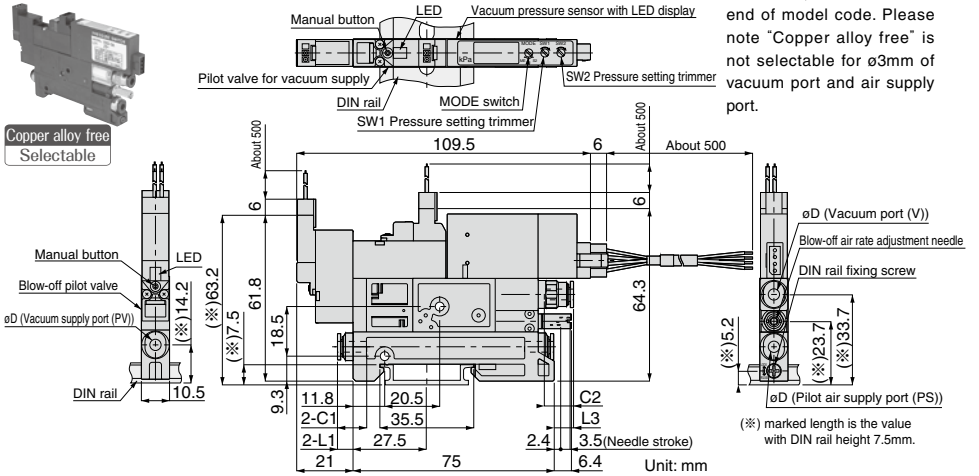

(※) marked length is the value with DIN rail height 7.5mm.

Unit: mm

Common dimension list on this page

Applicable tube O.D.(øD)	C1	C2	L1	L2	L3	CAD file name
3	10.9	10.4	5.8	13.2	7.2	–
4	10.9	10.9	5.8	13.2	7.2	VVX-010
6	11.7	11.7	8.7	13.5	7.5	

Common circuit diagram on this page

VXP-□□□-□-DW(-D)(Normally closed type)

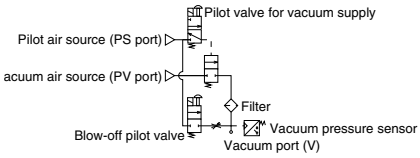

CAD 2D CAD data is available at PISCO website.

VXP 2 port valve, 1 switch output and 1 analog output with LED display. Direct-installation type

CAD 2D

Model code : VXP-□□□-□-DA

※ . When "Copper alloy free" is selected, add "-S3" at the end of model code. Please note "Copper alloy free" is not selectable for ø3mm of vacuum port and air supply port.

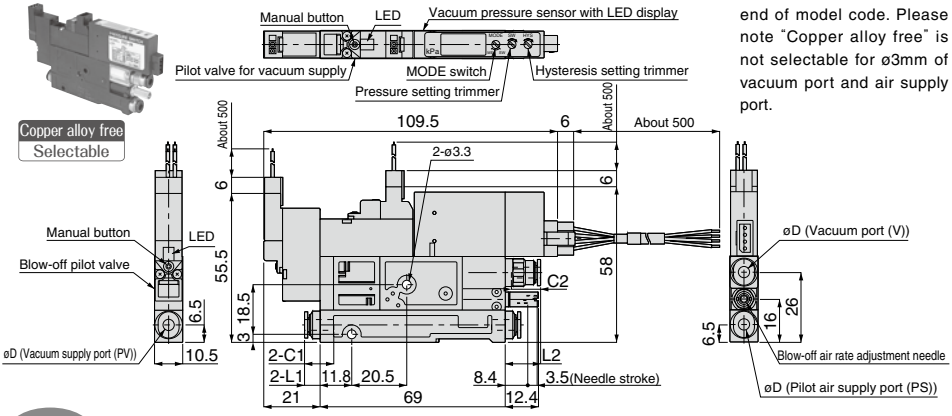

VXP 2 port valve, 1 switch output and 1 analog output with LED display, DIN rail type

CAD 2D

Model code : VXP-□□□-□-DA-D

※ . When "Copper alloy free" is selected, add "-S3" at the end of model code. Please note "Copper alloy free" is not selectable for ø3mm of vacuum port and air supply port.

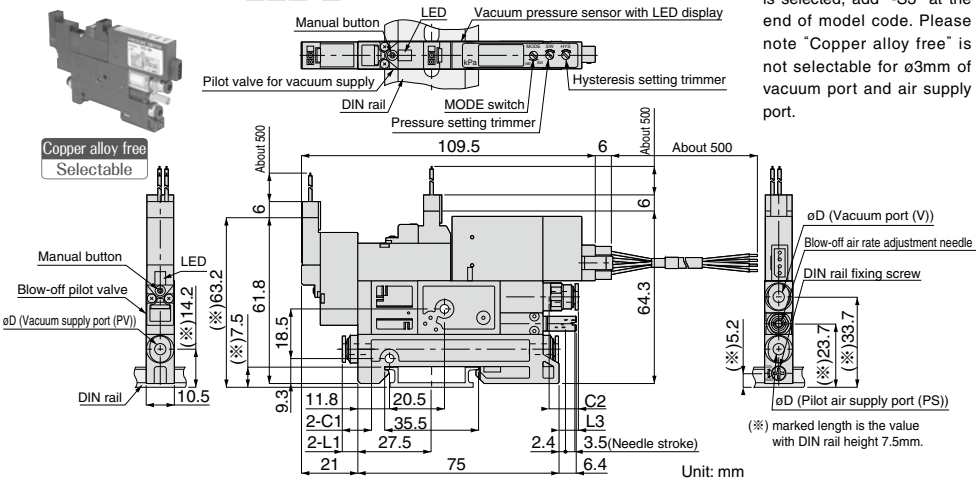

Unit: mm

Common dimension list on this page

Applicable tube O.D.(øD)	C1	C2	L1	L2	L3	CAD file name
3	10.9	10.4	5.8	13.2	7.2	–
4	10.9	10.9	5.8	13.2	7.2	VVX-011
6	11.7	11.7	8.7	13.5	7.5	

Common circuit diagram on this page

VXP-□□□-□-DA(-D)(Normally closed type)

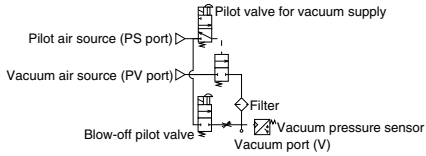

VXP 2 port valve, Analog output, Direct-installation type

CAD 2D

Model code : VXP-□□□-□-A0

※ . When "Copper alloy free" is selected, add "-S3" at the end of model code. Please note "Copper alloy free" is not selectable for ø3mm of vacuum port and air supply port.

Copper alloy free
Selectable

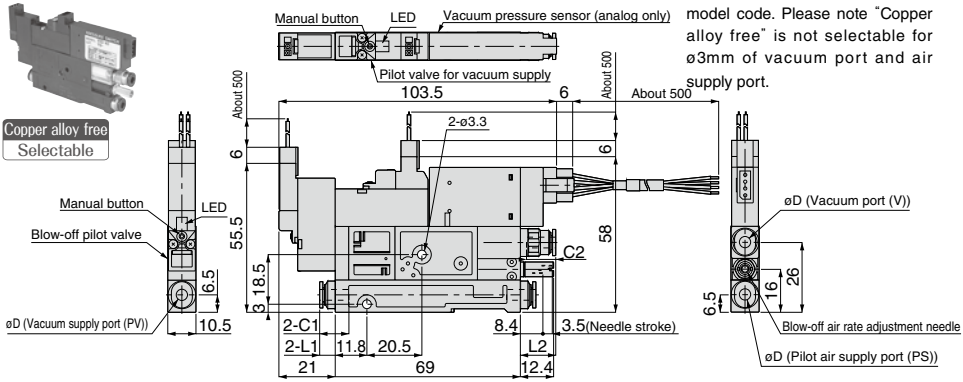

VXP 2 port valve, Analog output, DIN rail type

CAD 2D

Model code : VXP-□□□-□-A0-D

※ . When "Copper alloy free" is selected, add "-S3" at the end of model code. Please note "Copper alloy free" is not selectable for ø3mm of vacuum port and air supply port.

Copper alloy free
Selectable

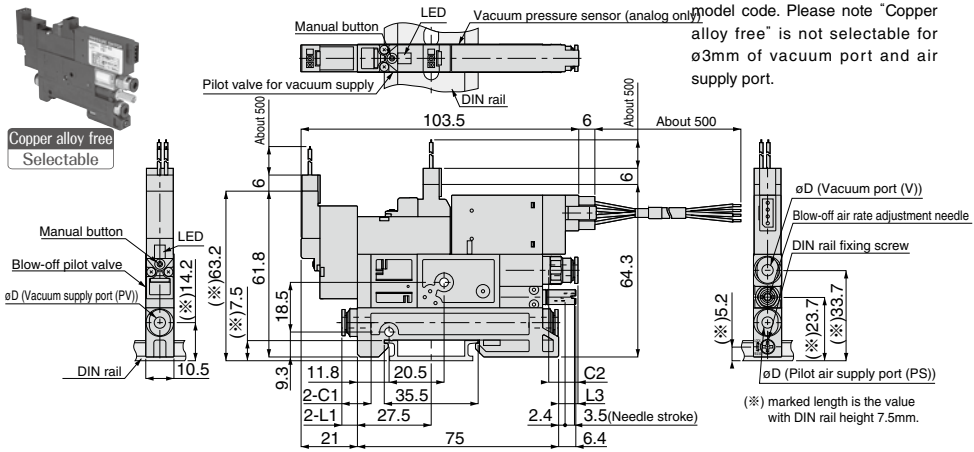

Unit: mm

Common dimension list on this page

Applicable tube O.D.(øD)	C1	C2	L1	L2	L3	CAD file name
3	10.9	10.4	5.8	13.2	7.2	-
4	10.9	10.9	5.8	13.2	7.2	VVX-012
6	11.7	11.7	8.7	13.5	7.5	

Common circuit diagram on this page

VXP-□□□-□-A0(-D)(Normally closed type)

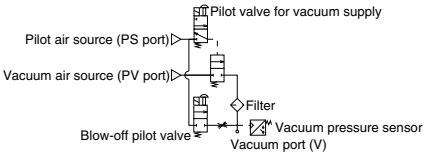

CAD 2D CAD data is available at PISCO website.

VXPT 3 port valve, Direct-installation type

CAD -2D-

Model code : VXPT-□□□-□

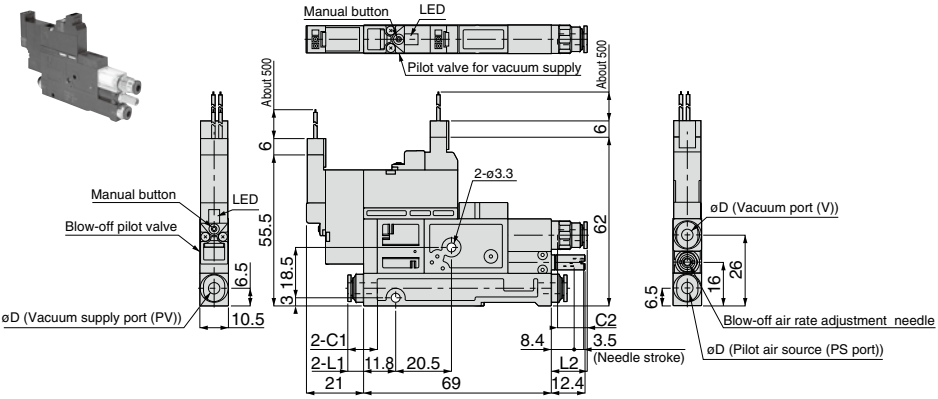

VXPT 3 port valve, DIN rail type

CAD -2D-

Model code : VXPT-□□□-□-D

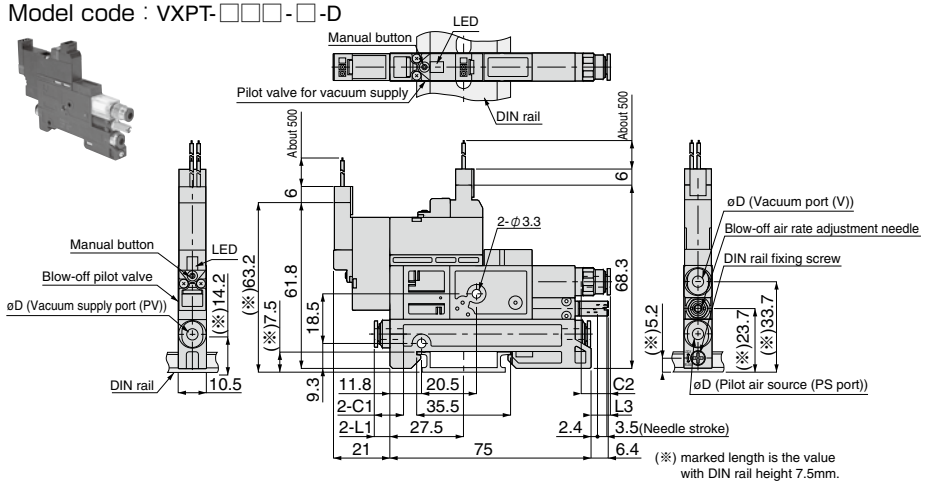

(※) marked length is the value with DIN rail height 7.5mm.

Unit: mm

Common dimension list on this page

Applicable tube O.D.(øD)	C1	C2	L1	L2	L3	CAD file name
3	10.9	10.4	5.8	13.2	7.2	–
4	10.9	10.9	5.8	13.2	7.2	VVX-013
6	11.7	11.7	8.7	13.5	7.5	

Common circuit diagram on this page

VXPT-□□□-□(-D)(Normally closed type)

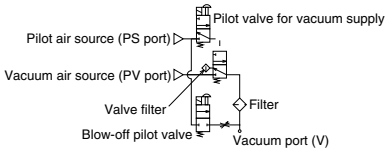

VXPT 3 port valve, 2 switch output with LED display, Direct-installation type

CAD 2D

Model code : VXPT-□□□-□-DW

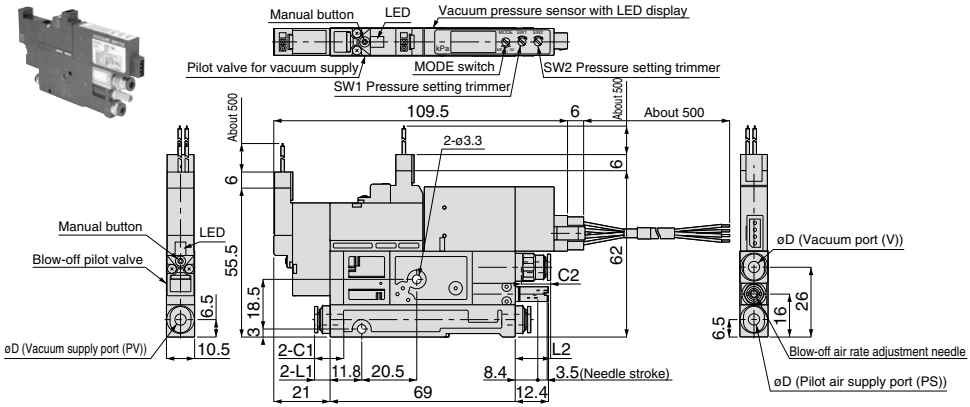

VXPT 3 port valve, 2 switch output with LED display, DIN rail type

CAD 2D

Model code : VXPT-□□□-□-DW-D

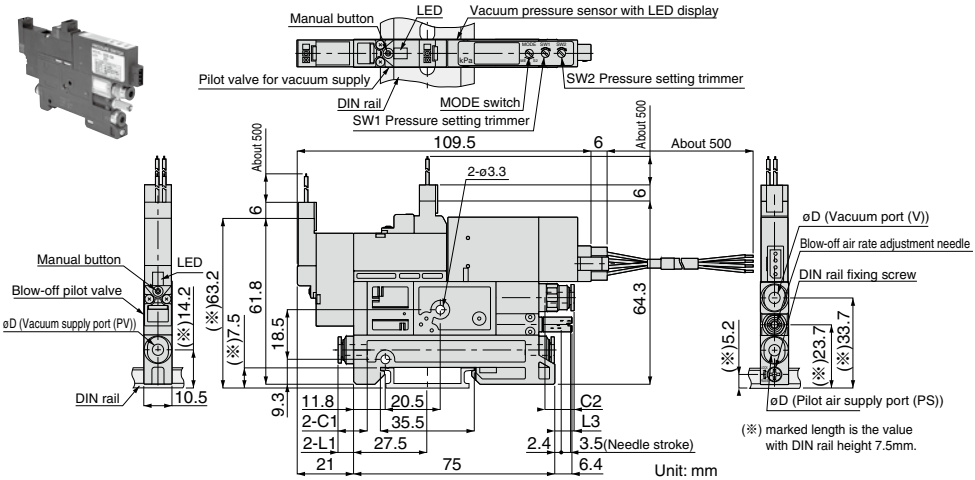

Common dimension list on this page

Applicable tube O.D.(øD)	C1	C2	L1	L2	L3	CAD file name
3	10.9	10.4	5.8	13.2	7.2	–
4	10.9	10.9	5.8	13.2	7.2	VVX-014
6	11.7	11.7	8.7	13.5	7.5	

Common circuit diagram on this page

VXPT-□□□-□-DW(-D)(Normally closed)

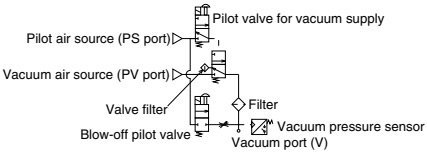

CAD 2D CAD data is available at PISCO website.

VXPT 3 port valve / 1 switch output and 1 analog output with LED display / Direct-installation type

CAD -2D-

Model code : VXPT-□□□-□-DA

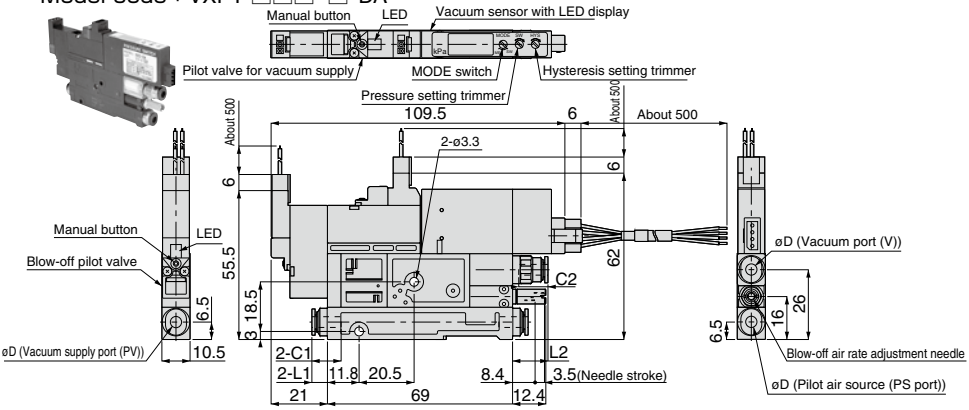

VXPT 3 port valve / 1 switch output and 1 analog output with LED display / DIN rail

CAD -2D-

Model code : VXPT-□□□-□-DA-D

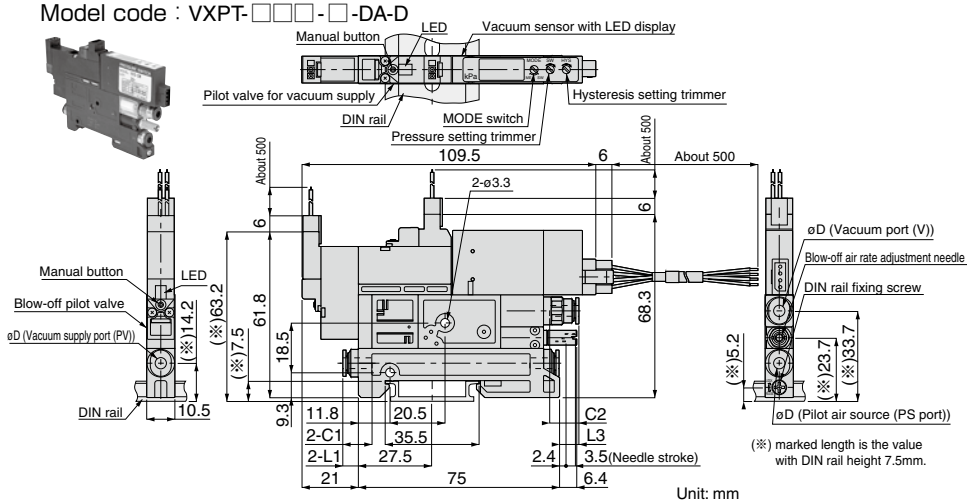

Unit: mm

Common dimension list on this page

Applicable tube O.D.(øD)	C1	C2	L1	L2	L3	CAD file name
3	10.9	10.4	5.8	13.2	7.2	–
4	10.9	10.9	5.8	13.2	7.2	VVX-015
6	11.7	11.7	8.7	13.5	7.5	

Common circuit diagram on this page

VXPT-□□□-□-DA(-D)(Normally closed type)

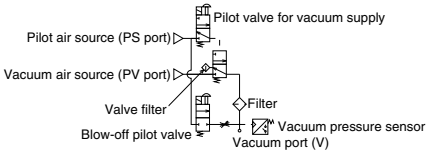

CAD -2D- CAD data is available at PISCO website.

VXPT 3 port valve, Analog output, Direct-installation type

CAD 2D

Model code : VXPT-□□□-□-A0

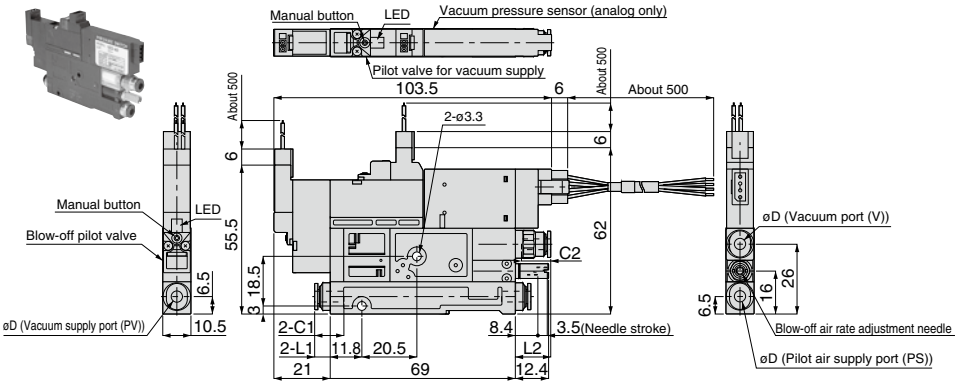

VXPT 3 port valve, Analog output, DIN rail type

CAD 2D

Model code : VXPT-□□□-□-A0-D

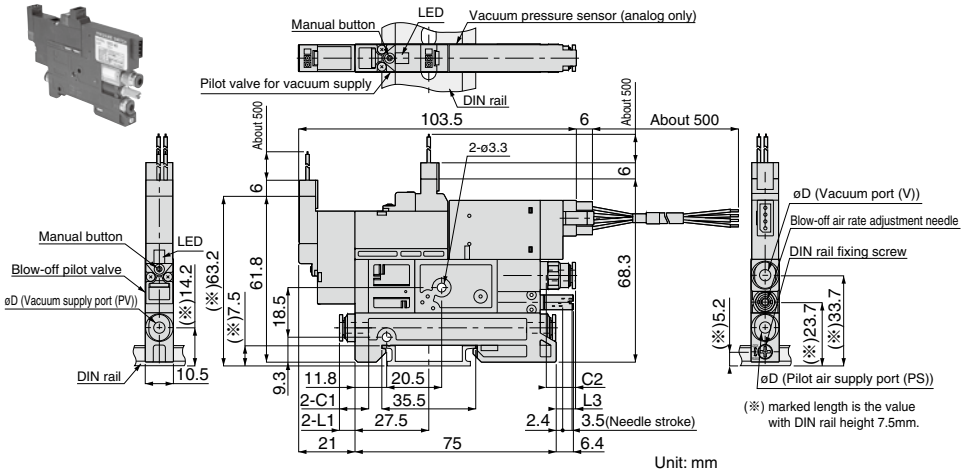

(※) marked length is the value with DIN rail height 7.5mm.

Unit: mm

Common dimension list on this page

Applicable tube O.D.(øD)	C1	C2	L1	L2	L3	CAD file name
3	10.9	10.4	5.8	13.2	7.2	-
4	10.9	10.9	5.8	13.2	7.2	VVX-016
6	11.7	11.7	8.7	13.5	7.5	

Common circuit diagram on this page

VXPT-□□□-□-AO(-D)(Normally closed type)

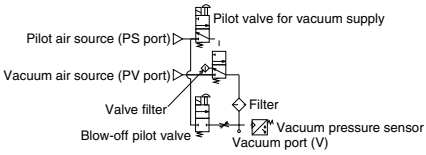

CAD 2D CAD data is available at PISCO website.

VXP·M 2 port valve, Manifold type

CAD -2D-

Model code	CAD file name
VXP□-□□□-□-□-M□	VVX-025, 026, 027, 028

※. When "Copper alloy free" is selected, add "-S3" at the end of model code. Please note "Copper alloy free" is not selectable for ø3mm of vacuum port.

Copper alloy free
Selectable

Unit: mm

Applicable tube O.D.(øD1)	C1	L1
3	10.4	0.2
4	10.9	0.2
6	11.7	-0.1

Applicable tube O.D.(øD2)	C2	L2
4	14.9	3.5
6	17	8.1
8	18.2	9.6
10	20.7	13.2

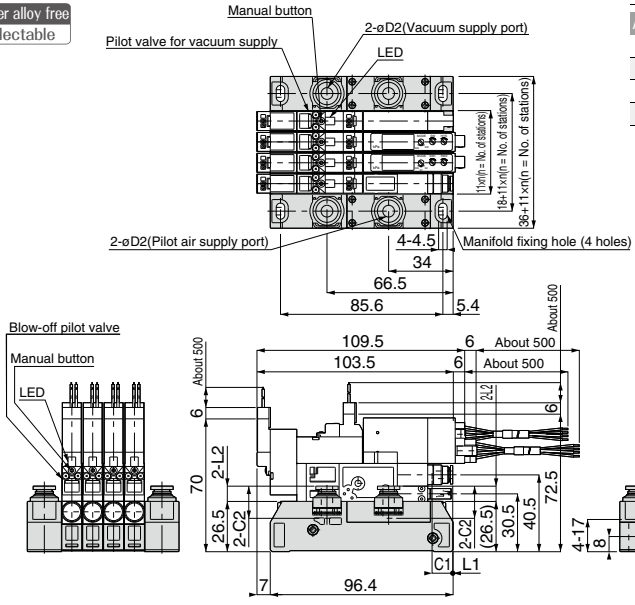

VXPT-M 3 port valve, Manifold type

CAD 2D

Model code	CAD file name
VXPT-□□□-□-□-M□	VVX-029, 030, 031, 032

Unit: mm

Applicable tube O.D.(øD1)	C1	L1
3	10.4	0.2
4	10.9	0.2
6	11.7	-0.1

Applicable tube O.D.(øD2)	C2	L2
4	14.9	3.5
6	17	8.1
8	18.2	9.6
10	20.7	13.2

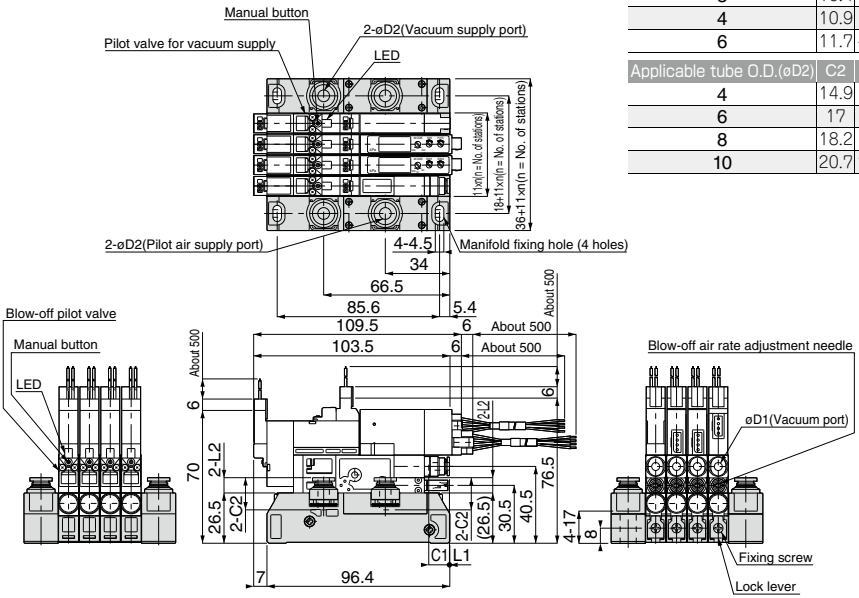

⚠ Detailed Safety Instructions

Before using PISCO products, be sure to read “Safety Instructions” and “Safety Instruction Manual” on page 35-39 and “Common Safety Instructions for Vacuum Series” on page 47-49.

Warning

1. The compressed air is dangerous if mishandled. It is recommended that a person having enough knowledge and experience carry out the assembling or maintenance of a machine or a device using pneumatic equipments.
2. At maintenance check of the product, shut electrical power supply and the air supply, and make sure to vent the residual pressure in the air circuit in advance. When installing or removing of a unit to/from a manifold, make sure to shut off air supply and to exhaust the residual pressure in the air circuit first.
3. The product is not explosive-proof. Do not use in the environments containing flammable or explosive gases or liquid. Please avoid using in a condition that a pressure of 0.1MPa or higher is continuously supplied to vacuum circuit.
4. The coil in a pilot solenoid valve generates heat under the following ① to ③ conditions. The heat may cause dropping life cycle, malfunctions and burn or may affect negatively on peripheral machines.
   Contact us when the power is applied to the vacuum generator under the following conditions:
   ① The power is continuously ON for over 2 hours.
   ② High-cycle operation.
   ③ Even when intermittent running of the generator is carried out,, the total operation time per day is longer than non-operation time.
5. When the electricity is applied to valves continuously for a long time, the coils generate heat. It may cause dropping life cycle, malfunctions, getting burnt or damaging peripheral machines due to the heat.

Caution

1. The product shall be used within the operating pressure range. Otherwise, there are risks of damage or deformation.
2. In case of External Vacuum Controller VXP, air supply shortage and insufficient exhaust port capacity by increasing number of station units may cause the trouble such as vacuum performance drop. Allowable station numbers of simultaneous operation differs by operation conditions. Please contact PISCO for details in advance.
3. Although manifold type is the open to air exhaust by individual unit, the exhaust air from a vacuum-generating unit may be leaked to the vacuum port of other non-operating units. If this is any problem about it, please contact PISCO sales office.

⚠ Safety Rules for Use

■ Pressure setting method of Vacuum Switch
→ Refer to the method for VX on page 217.

■ Safety Instructions for Vacuum Sensor with LED display
→ Refer to the instructions for VX on page 218.

■ Blow-off air adjustment method
→ Refer to the method for VX on page 218.

■ How to replace Filter elements
→ Refer to the method on page 219.

■ How to replace Valve Filter Elements

■ Remove a pilot valve for vacuum supply in order to replace the filter element. Make sure not to lose seal rubbers of the valve after the replacement. Tighten the screws firmly with the tightening torque 0.3-0.35Nm.

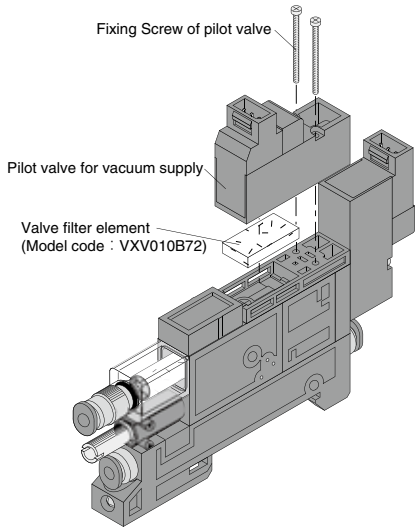

■ How to replace Mounting Units of Manifold type
→ Refer to the method for VX on page 220.

■ How to replace Silencer Elements of Manifold type
→ Refer to the method of VX on page 221.

⚠ SAFETY Instructions

This safety instructions aim to prevent personal injury and damage to properties by requiring proper use of PISCO products.

Be certain to follow ISO 4414 and JIS B 8370

ISO 4414 : Pneumatic fluid power…Recomendations for the application of equipment to transmission and control systems.

JIS B 8370 : General rules and safety requirements for systems and their components.

This safety instructions is classified into "Danger", "Warning" and "Caution" depending on the degree of danger or damages caused by improper use of PISCO products.

⚠ Danger	Hazardous conditions. It can cause death or serious personal injury.
⚠ Warning	Hazardous conditions depending on usages. Improper use of PISCO products can cause death or serious personal injury.
⚠ Caution	Hazardous conditions depending on usages. Improper use of PISCO products can cause personal injury or damages to properties.

⚠ Warning

1. Selection of pneumatic products
   ① A user who is a pneumatic system designer or has sufficient experience and technical expertise should select PISCO products.
   ② Due to wide variety of operating conditions and applications for PISCO products, carry out the analysis and evaluation on PISCO products. The pneumatic system designer is solely responsible for assuring that the user's requirements are met and that the application presents no health or safety hazards. All designers are required to fully understand the specifications of PISCO products and constitute all systems based on the latest catalog or information, considering any malfunctions.

2. Handle the pneumatic equipment with enough knowledge and experience
   ① Improper use of compressed air is dangerous. Assembly, operation and maintenance of machines using pneumatic equipment should be conducted by a person with enough knowledge and experience.

3. Do not operate machine / equipment or remove pneumatic equipment until safety is confirmed.
   ① Make sure that preventive measures against falling work-pieces or sudden movements of machine are completed before inspection or maintenance of these machine.
   ② Make sure the above preventive measures are completed. A compressed air supply and the power supply to the machine must be off, and also the compressed air in the systems must be exhausted.
   ③ Restart the machines with care after ensuring to take all preventive measures against sudden movements.

※. This safety instructions are subject to change without notice.

Disclaimer

1. PISCO does not take any responsibility for any incidental or indirect loss, such as production line stop, interruption of business, loss of benefits, personal injury, etc., caused by any failure on use or application of PISCO products.

2. PISCO does not take any responsibility for any loss caused by natural disasters, fires not related to PISCO products, acts by third parties, and intentional or accidental damages of PISCO products due to incorrect usage.

3. PISCO does not take any responsibility for any loss caused by improper usage of PISCO products such as exceeding the specification limit or not following the usage the published instructions and catalog allow.

4. PISCO does not take any responsibility for any loss caused by remodeling of PISCO products, or by combinational use with non-PISCO products and other software systems.

5. The damages caused by the defect of Pisco products shall be covered but limited to the full amount of the PISCO products paid by the customer.

⚠ SAFETY INSTRUCTION MANUAL

PISCO products are designed and manufactured for use in general industrial machines. Be sure to read and follow the instructions below.

⚠ Danger

1. Do not use PISCO products for the following applications.
   ① Equipment used for maintaining / handling human life and body.
   ② Equipment used for moving / transporting human.
   ③ Equipment specifically used for safety purposes.

⚠ Warning

1. Do not use PISCO products under the following conditions.
   ① Beyond the specifications or conditions stated in the catalog, or the instructions.
   ② Under the direct sunlight or outdoors.
   ③ Excessive vibrations and impacts.
   ④ Exposure / adhere to corrosive gas, inflammable gas, chemicals, seawater, water and vapor. *
   ＊Some products can be used under the condition above(④), refer to the details of specification and condition of each product.
2. Do not disassemble or modify PISCO products, which affect the performance, function, and basic structure of the product.
3. Turn off the power supply, stop the air supply to PISCO products, and make sure there is no residual air pressure in the pipes before maintenance and inspection.
4. Do not touch the release-ring of push-in fitting when there is a working pressure. The lock may be released by the physical contact, and tube may fly out or slip out.
5. Frequent switchover of compressed air may generate heat, and there is a risk of causing burn injury.
6. Avoid any load on PISCO products, such as a tensile strength, twisting and bending. Otherwise, there is a risk of causing damage to the products.
7. As for applications where threads or tubes swing / rotate, use Rotary Joints, High Rotary Joints or Multi-Circuit Rotary Block only. The other PISCO products can be damaged in these applications.
8. Use only Die Temperature Control Fitting Series, Tube Fitting Stainless SUS316 Series, Tube Fitting Stainless SUS316 Compression Fitting Series or Tube Fitting Brass Series under the condition of over 60℃ (140° F) water or thermal oil. Other PISCO products can be damaged by heat and hydrolysis under the condition above.
9. As for the condition required to dissipate static electricity or provide an antistatic performance, use EG series fitting and antistatic products only, and do not use other PISCO products. There is a risk that static electricity can cause system defects or failures.
10. Use only Fittings with a characteristic of spatter-proof such as Anti-spatter or Brass series in a place where flame and weld spatter is produced. There is a risk of causing fire by sparks.
11. Turn off the power supply to PISCO products, and make sure there is no residual air pressure in the pipes and equipment before maintenance. Follow the instructions below in order to ensure safety.
    ① Make sure the safety of all systems related to PISCO products before maintenance.
    ② Restart of operation after maintenance shall be proceeded with care after ensuring safety of the system by preventive measures against unexpected movements of machines and devices where pneumatic equipment is used.
    ③ Keep enough space for maintenance when designing a circuit.
12. Take safety measures such as providing a protection cover if there is a risk of causing damages or fires on machine / facilities by a fluid leakage.

⚠ Caution

1. Remove dusts or drain before piping. They may get into the peripheral machine / facilities and cause malfunction.
2. When inserting an ultra-soft tube into push-in fitting, make sure to place an Insert Ring into the tube edge. There is a risk of causing the escape of tube and a fluid leakage without using an Insert Ring.
3. The product incorporating NBR as seal rubber material has a risk of malfunction caused by ozone crack. Ozone exists in high concentrations in static elimination air, clean-room, and near the high-voltage motors, etc. As a countermeasure, material change from NBR to HNBR or FKM is necessary. Consult with PISCO for more information.
4. Special option "Oil-free" products may cause a very small amount of a fluid leakage. When a fluid medium is liquid or the products are required to be used in harsh environments, contact us for further information.
5. In case of using non-PISCO brand tubes, make sure the tolerance of the outer tube diameter is within the limits of Table 1.

●Table 1. Tube O.D. Tolerance

mm size	Nylon tube	Polyurethane tube
ø1.8mm	—	±0.05mm
ø3mm	—	±0.15mm
ø4mm	±0.1mm	±0.15mm
ø6mm	±0.1mm	±0.15mm
ø8mm	±0.1mm	±0.15mm
ø10mm	±0.1mm	±0.15mm
ø12mm	±0.1mm	±0.15mm
ø16mm	±0.1mm	±0.15mm

inch size	Nylon tube	Polyurethane tube
ø1/8	±0.1mm	±0.15mm
ø5/32	±0.1mm	±0.15mm
ø3/16	±0.1mm	±0.15mm
ø1/4	±0.1mm	±0.15mm
ø5/16	±0.1mm	±0.15mm
ø3/8	±0.1mm	±0.15mm
ø1/2	±0.1mm	±0.15mm
ø5/8	±0.1mm	±0.15mm

6. Instructions for Tube Insertion
   ① Make sure that the cut end surface of the tube is at right angle without a scratch on the surface and deformations.
   ② When inserting a tube, the tube needs to be inserted fully into the push-in fitting until the tubing edge touches the tube end of the fitting as shown in the figure below. Otherwise, there is a risk of leakage.

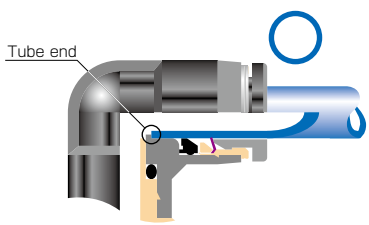

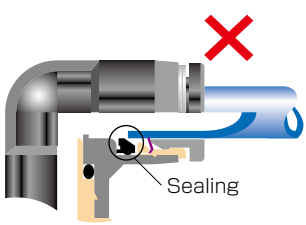

Tube is not fully inserted up to tube end.

   ③ After inserting the tube, make sure it is inserted properly and not to be disconnected by pulling it moderately.
   ※. When inserting tubes, Lock-claws may be hardly visible in the hole, observed from the front face of the release-ring. But it does not mean the tube will surely escape. Major causes of the tube escape are the followings;
   ①Shear drop of the lock-claws edge
   ②The problem of tube diameter (usually small)
   Therefore, follow the above instructions from ① to ③, even lock-claws is hardly visible.

7. Instructions for Tube Disconnection
   ① Make sure there is no air pressure inside of the tube, before disconnecting it.
   ② Push the release-ring of the push-in fitting evenly and deeply enough to pull out the tube toward oneself. By insufficient pushing of the release-ring, the tube may not be pulled out or damaged by scratch, and tube shavings may remain inside of the fitting, which may cause the leakage later.
8. Instructions for Installing a fitting
   ① When installing a fitting, use proper tools to tighten a hexagonal-column or an inner hexagonal socket. When inserting a hex key into the inner hexagonal socket of the fitting, be careful so that the tool does not touch lock-claws. The deformation of lock-claws may result in a poor performance of systems or an escape of the tube.
   ② Refer to Table 2 which shows the recommended tightening torque. Do not exceed these limits to tighten a thread. Excessive tightening may break the thread part or deform the gasket and cause a fluid leakage. Tightening thread with tightening torque lower than these limits may cause a loosened thread or a fluid leakage.
   ③ Adjust the tube direction while tightening thread within these limits, since some PISCO products are not rotatable after the installation.

●Table 2: Recommended tightening torque / Sealock color / Gasket materials

Thread type	Thread size	Tightening torque	Sealock color	Gasket materials
Metric thread	M3 × 0.5	0.7N·m	—	SUS304 NBR
	M5 × 0.8	1.0 ~ 1.5N·m		
	M6 × 1	2 ~ 2.7N·m		
	M3 × 0.5	0.5 ~ 0.6N·m		POM
	M5 × 0.8	1 ~ 1.5N·m		
	M6 × 0.75	0.8 ~ 1N·m		
	M8 × 0.75	1 ~ 2N·m		
Taper pipe thread	R1/8	7 ~ 9N·m	White	—
	R1/4	12 ~ 14N·m		
	R3/8	22 ~ 24N·m		
	R1/2	28 ~ 30N·m		
Unified thread	No.10-32UNF	1.0 ~ 1.5N·m	—	SUS304、NBR
National pipe thread taper	1/16-27NPT	7 ~ 9N·m	White	—
	1/8-27NPT	7 ~ 9N·m		
	1/4-18NPT	12 ~ 14N·m		
	3/8-18NPT	22 ~ 24N·m		
	1/2-14NPT	28 ~ 30N·m		

※ These values may differ for some products. Refer to each specification as well.

9. Instructions for removing a fitting
   ① When removing a fitting, use proper tools to loosen a hexagonal-column or an inner hex bolt.
   ② Remove the sealant stuck on the mating equipment. The remained sealant may get into the peripheral equipment and cause malfunctions.
10. Arrange piping avoiding any load on fittings and tubes such as twist, tensile, moment load, shaking and physical impact. These may cause damages to fittings, tube deformations, bursting and the escape of tubes.

⚠ Common Safety Instructions for Vacuum Series

Before selecting or using PISCO products, read the following instructions. Read the detailed instructions for individual series.

⚠ Warning

1. If there is a risk of dropping work-pieces during vacuum suction, take a safety measure against the falling of them.
2. Avoid supplying more than 0.1MPa pressure constantly in a vacuum circuit. Since vacuum generators are not explosive-proof, there is a risk of damaging the products.
3. Pay attention to drop of vacuum pressure caused by problems of the supplied air or the power supply. Decrease of suction force may lead to a danger of falling work-piece so that safety measure against the falling of them is necessary.
4. When more than 2 vacuum pads are plumbed on a single ejector and one of them has a suction problem such as vacuum leak, there is a risk of releasing work-pieces from the other pad due to the drop of the vacuum pressure.
5. Do not use in the way by which exhaust port is blocked or exhaust resistance is increased. Otherwise, there is a risk of no vacuum generation or a drop of the vacuum pressure.
6. Do not use the product in the circumstance of corrosive gas, inflammable gas, explosive gas, chemicals, seawater and vapor or do not expose the product to those. Never allow the product to suck those things.
7. Provide a protective cover on the products when it is exposed to sunlight.
8. Carry out clogging check for silencer element in an ejector and a vacuum filter periodically. Clogged element will be a cause to impair the performance or a cause of troubles.
9. Before replacing the element, thoroughly read and understand the method of filter replacement in the catalog.
10. Make sure the correct port of the vacuum generator by this catalog or marking on the products when plumbing. Wrong plumbing can be a risk to damage the product.
11. Supply clean air without sludge or dusts to an ejector. Do not lubricate by a lubricator. There is a risk of malfunction or performance impairing by impurities and oil contained in the compressed air.
12. Do not apply extreme tension, twist or bending forces on a lead wire. Otherwise, it may cause a wire breaking.
13. Locknut needs to be tightened firmly by hand. Do not use any tool to tighten. In case of using tools to tighten the locknut, it may damage the locknut or the product. Inadequate tightening may loosen the locknut and the initial setting can be changed.
14. Do not force the product to rotate or swing even its resin body is rotatable. It may cause damage to the product and a fluid leakage.
15. Do not supply an air pressure or a dry air to the products over the necessary amount. There is a risk of deteriorating rubber materials and malfunction due to oil.
16. Keep the product away from water, oil drops or dusts. These may cause malfunction. Take a proper measure to protect the product before the operation.

17. Do not use the product in the environment of inflammable or explosive gas / fluid. It can cause a fire or an explosion hazard.
18. Do not use the product in the circumstance of corrosive gas, inflammable gas, explosive gas, chemicals, seawater and vapor or do not expose the product to those. Otherwise, it may be a cause of malfunction.
19. Do not clean or paint the products by water or a solvent.

⚠ Caution

1. Operating pressure range in the catalog is the values during ejector operation. Secure the described value of the supplied air, taking a drop of the pressure into consideration. Insufficient pressure, which does not satisfy the spec, may cause abnormal noise, unstable performance and may negatively affect sensors, bringing troubles at last.
2. Effective cross-section area of the air supply side needs to be three times as large as effective cross-section area of the nozzle bore. When arranging piping or selecting PISCO products, secure required effective cross-section area. Insufficient supply pressure may be a cause to impair performance.
3. A Shorter distance of plumbing with a wider bore is preferable at vacuum system side. A long plumbing with a small bore may result in slow response time at the time of releasing work-piece as well as in failure to secure adequate suction flow rate.
4. Plumb a vacuum switch and an ejector with vacuum switch at the end of vacuum system as much as possible. A long distance between a vacuum switch and a vacuum system end may increase plumbing resistance which may lead to a high vacuum level at the sensor even when no suctioning and a malfunction of vacuum switch. Make sure to evaluate the products in an actual system.
5. Refer to “4. Instructions for Installing a fitting” and “5. Instructions for Removing a fitting” under “Common Safety Instructions for Fittings” , when installing or removing Fittings.
6. Refer to “Common Safety Instructions for Pressure Sensors” and “Detailed Safety Instructions” for the handling of digital vacuum switch sensor.
7. Refer to “Common Safety Instructions for Mechanical Vacuum Sensor” for the handling of mechanical vacuum switch.
8. The material of plastic filter cover for VG, VK, VJ, VZ and VX series is PCTG. Avoid the adherence of Chemicals below to the products, and do not use them under those chemical environments.

● Table Chemical Name

Chemical Name
Thinner
Carbon tetrachloride
Chloroform
Acetate
Aniline
Cyclohexane
Trichloroethylene
Sulfuric acid
Lactic acid
Water soluble cutting oil (alkaline)

* There are more chemicals which should be avoided. Contact us for the use under chemical circumstance.

9. The material of plastic filter cover for VQ and VFU series is PA. Avoid the adherence of chemicals below to the products, and do not use them under those chemical environments.

● Table Chemical Name

Chemical Name
Methanol
Ethanol
Nitric acid
Sulfuric acid
Hydrochloric acid
Lactic acid
Acetone
Chloroform
Aniline
Trichloroethylene
Hydrogen peroxide

* There are more chemicals which should be avoided. Contact us for the use under chemical circumstance.

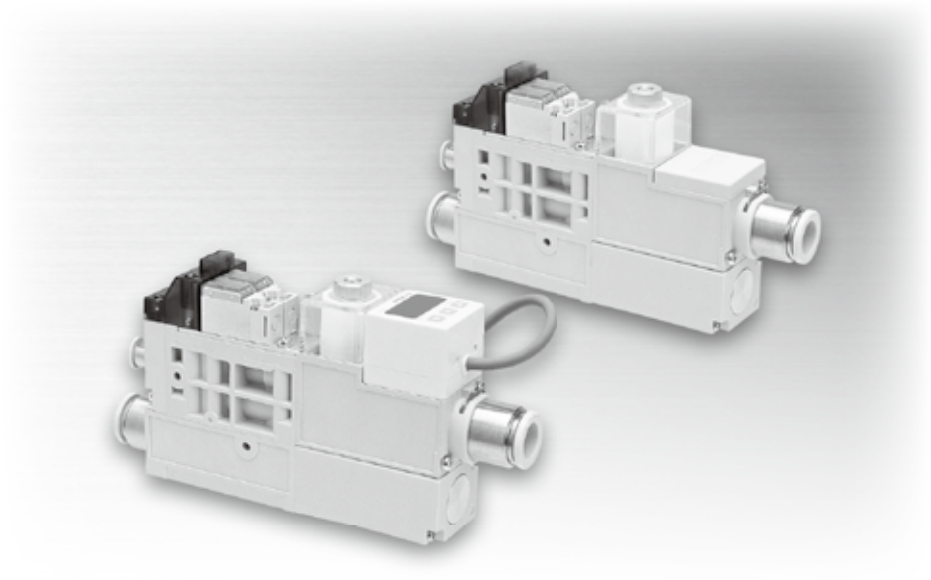

External Vacuum Controller best suitable to control vacuum large flow

External Vacuum Controller VQP Series

- *External Vacuum Controller with 31.5mm in width suitable to control vacuum large flow.*
- *Wide variety of combinations enables to meet various applications. Complex Vacuum Generator, VQ Series, is also available. (P.222).*
- *2 selections of vacuum supply valve types: normally closed and normally open types.*
- *Visibility improvement by vacuum sensor with 31mm size LED display.*

Construction

●Construction (Blow-off)

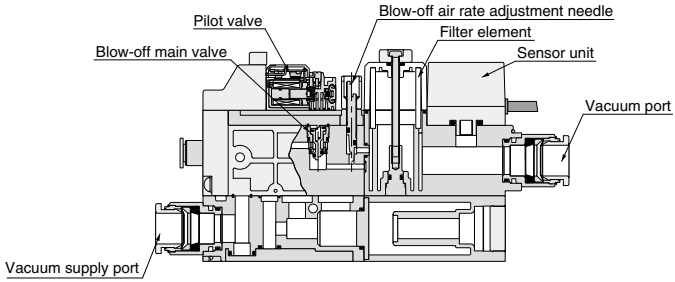

●Construction (Vacuum suction)

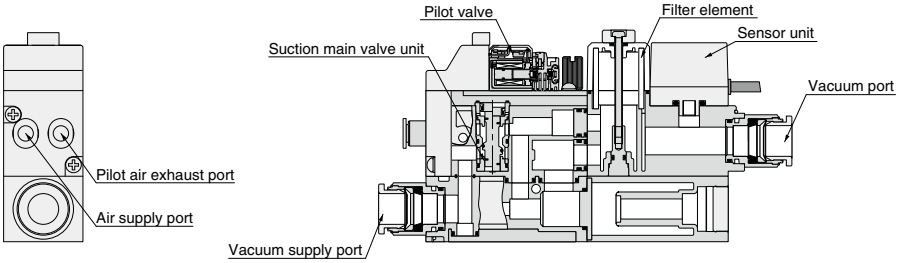

How VQP series works

At vacuum generation suspended

●Blow-off

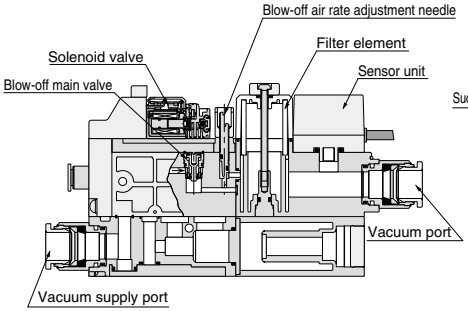

●Vacuum suction

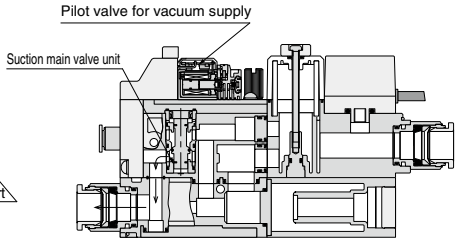

At vacuum generating

●Blow-off

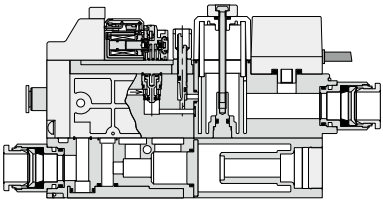

●Vacuum suction

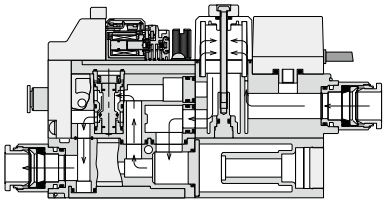

At blow-off air supply

●Blow-off

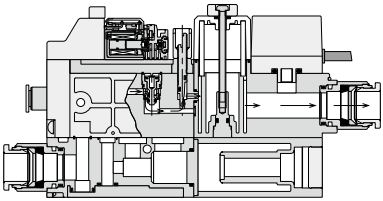

●Vacuum suction

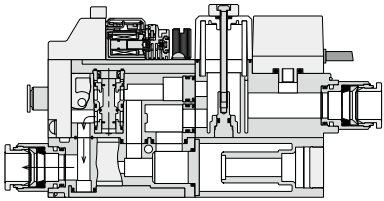

Model Designation (Example)

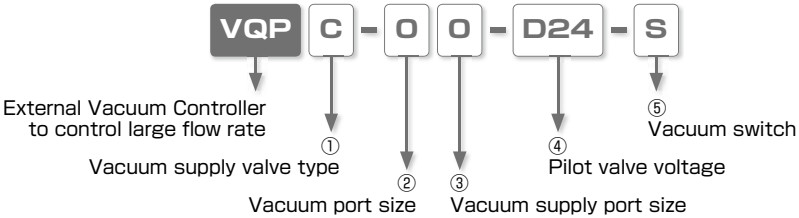

① Vacuum supply valve type

Code	Valve type	Code	Valve type
C	Normally closed type	O	Normally open type

② Vacuum port size (Applicable tube size)

Code	0	2	3
Tube dia.(mm)	ø10 (Push-In Fitting)	ø12 (Push-In Fitting)	ø16 (Push-In Fitting)

③ Vacuum supply port (Applicable tube size)

Code	0	2	3
Tube dia.(mm)	ø10 (Push-In Fitting)	ø12 (Push-In Fitting)	ø16 (Push-In Fitting)

④ Pilot valve voltage

Code	D24	A100
Voltage	DC24V	AC100V

⑤ Vacuum switch

Code	Switch	Code	Switch
S	2 switch output with 31mm LED display	No code	Without vacuum switch

Specification (supply pressure)

Fluid medium	Air
Operating pressure range	0.3 ~ 0.7 MPa
Operating temp. range	5 ~ 50°C
Operating vacuum range	-100 ~ 0kPa

Solenoid valve

Pilot valve

Operating system	Direct operation	
Valve construction	Elastic seal, Poppet valve	
Rated voltage	DC24V	AC100V
Allowable voltage range	DC24V ±10%	AC100V ±10%
Surge protection circuit	Surge absorber	Diode bridge
Power consumption	0.55W	1VA
Manual operation	Push-lock button	
Operation indicator	Coil excitation: Red LED ON	

Switchover valve

Item	Suction main valve	Blow-off main valve
Operating system	Pneumatic operation by pilot valve	
Valve construction	Elastic seal, Poppet valve	
Valve type	N.C. / N.O.	N.C.
Lubrication	Not required	
Effective sectional area (Cv)	16.5mm^2 (0.89)	3.5mm^2 (0.19)

Vacuum switch

Operating pressure range	-100 ~ 100kPa
Proof pressure	200kPa
Operating temp. range	-10 ~ 50°C (No freezing)
Operating humidity range	35 ~ 85%RH (No dew condensation)
Rated voltage	12 ~ 24VDC ±10%, ripple P-P: 10% or less
Protective structure	IEC standard IP40 equiv.
No. of pressure setting	2
Switch output	NPN open collector output / DC30V 100mA or less / Residual voltage: 1.2V or less (at 100mmA load current)
Differential response	0 ~ 30 digit (Variable)
Indication accuracy	Within the range of ±3%F.S.
Response time	5m·sec max.
Indication	2-1/2 digit-7-segmented LED display
Display frequency	About 4 times/sec.
Indication accuracy	±1%F.S. ±1digit
Temperature characteristics	±0.3%F.S. max. (0 ~ 50°C(Standard at 25°C)

Filter specification

Element material	PVF(Polyvinyl formal)
Filtering capacity	10μm
Filter surface area	1,507mm²
Replacement element model code	VQ030B61

Blow-off function

Blow-off air rate	0 ~ 50ℓ/min(ANR) (When supply pressure is at 0.5Mpa)

Valve lead wires

DC24V	Black	Gray	Blue	Brown
	Vacuum suction(–)	Blow-off(–)		DC24V (+ common)

AC100V	Black	Gray	Blue	Brown
	Vacuum suction(–)	Blow-off(–)		common

Circuit diagram (Solenoid valve)

DC24V

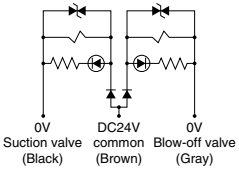

AC100V

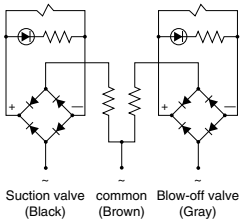

Vacuum switch electric circuit

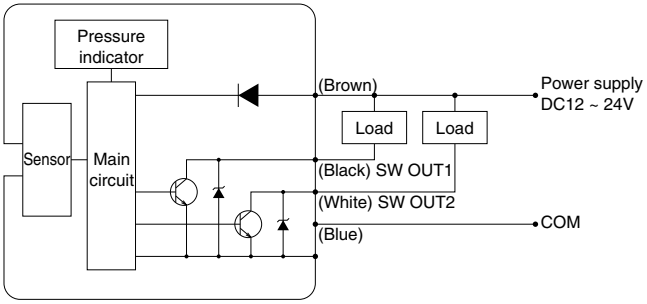

How to insert and disconnect

1. How to insert and disconnect tubes

① Tube insertion

Insert a tube into Push-In Fitting of the External Vacuum Controller VQP up to the tube end. Lock-claws bites the tube to fix it automatically and the elastic sleeve seals around the tube.

Refer to "2. Instructions for Tube Insertion" under "Common Safety Instructions for Fittings" .

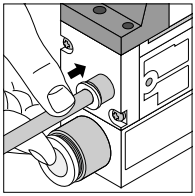

② Tube disconnection

The tube is disconnected by pushing release-ring to release Lock-claws.

Make sure to stop air supply before the tube disconnection.

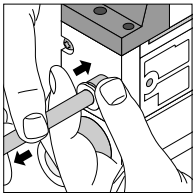

2. How to fix body

In order to fix the External Vacuum Controller VQP, tighten M3 threads through the fixing holes on the resin body with tightening torque 0.3 to 0.35Nm. Refer to the outer dimensional drawings for the hole pitch.

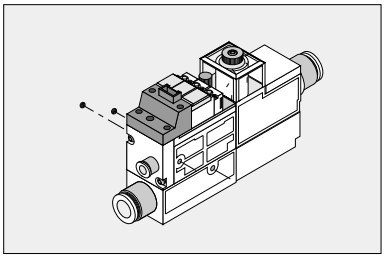

Applicable Tube and Related Products

Polyurethane Tube(1. Piping products catalog P.596)

■ Polyurethane Tube is for the general pneumatic piping and suitable for a compact piping.

Nylon Tube(1. Piping products catalog P.608)

■ Nylon Tube is for the general pneumatic piping and suitable for a high-pressure fluid up to 1.5MPa (NB tube: 1.0MPa).

Vacuum Tube(1. Piping products catalog P.612)

■ Vacuum Tube is a ultra-soft tube and suitable for piping of vacuum generators or actuators.

Vacuum Pads

Standard Size List

Without vacuum switch

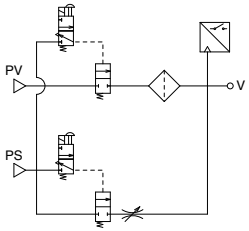

Type	Page to refer	Vacuum port	Vacuum supply port		
			10mm	12mm	16mm
VQP	374	10mm	●	●	●
		12mm	●	●	●
		16mm	●	●	●

Vacuum switch

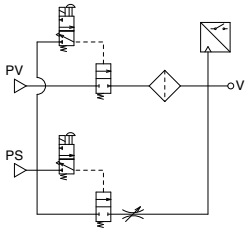

Type	Page to refer	Vacuum port	Vacuum supply port		
			10mm	12mm	16mm
VQP	374	10mm	●	●	●
		12mm	●	●	●
		16mm	●	●	●

VQP Without vacuum switch

Model code : VQP□-□□-□

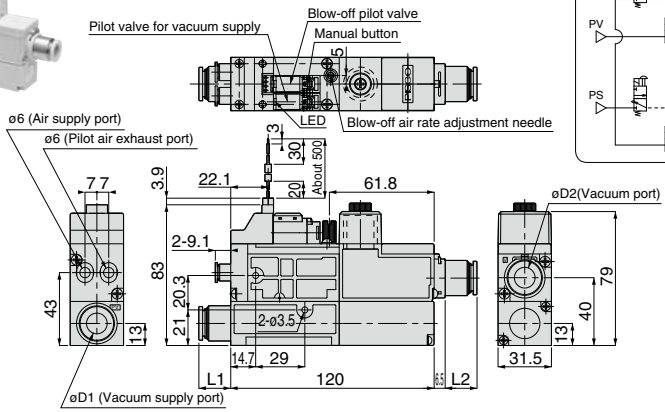

Circuit diagram.

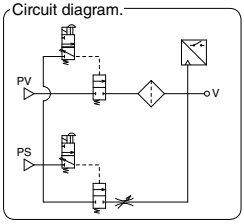

VQP With 2 switch output vaccum switch

Model code : VQP□-□□-□S

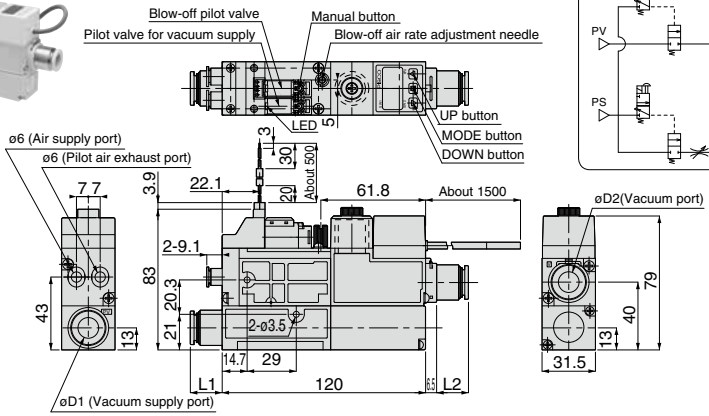

Circuit diagram.

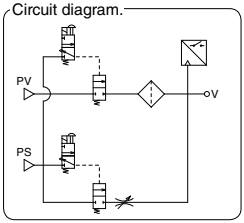

Common dimension list on this page

Unit: mm

	Applicable tube O.D. øD1	L1	Applicable tube O.D. øD2	L2
Vacuum supply port	10	14.7	–	–
	12	18.8	–	–
	16	23.9	–	–
Vacuum port	–	–	10	14.7
	–	–	12	14.7
	–	–	16	23.9

⚠ Detailed Safety Instructions

Before using PISCO products, be sure to read "Safety Instructions" and "Safety Instruction Manual" on page 35-39 and "Common Safety Instructions for Vacuum Series" on page 47-49.

Warning

1. Operating temp. range of this series is 5-50℃ . Do not operate the product out of this range.
2. The coil in a pilot solenoid valve generates heat under the following ① to ③ conditions. The heat may cause dropping life cycle, malfunctions, getting burnt or damaging peripheral machines. Contact us when the power is applied to the vacuum generator under the following conditions:
   ① The power is continuously ON for over 2 hours.
   ② High-cycle operation.
   ③ Even when intermittent running of the generator is carried out, the total operation time per day is longer than non-operation time.
3. When the electricity is applied to valves continuously for a long time, the coils generate heat. It may cause dropping life cycle, malfunctions, getting burnt or damaging peripheral machines due to the heat.
4. Switchover valve of double-solenoid types is placed in neutral after the supply of pilot air has been suspended (the same is true when the valve is being operated for the first time after shipment). When resuming the supply of pilot air, be sure to send a signal to the pilot valve, or conduct switchover operations manually as required.
5. For the operation of the valve, make sure that the leakage current is less than 1mA. Leakage current larger than that may cause malfunction.
6. Vacuum retention function of External Vacuum Controller permits some vacuum leakage. When vacuum retention for a long period of time is required, provide an appropriate safety measure.
7. Do not use the product in the environment including a corrosive gas.
8. The product is not explosive-proof. Do not use it in the environments containing flammable or explosive gases or liquid. It may cause a fire or an explosion under these environments.
9. Do not use the product out of the operation temperature range. It may cause a malfunction of the sensor by the heat.
10. When wiring, be sure to 1) switch OFF the power, and 2) confirm the color of each lead wire, terminal numbers, etc. in order to prevent the output terminal from being inadvertently short-circuited with the power source and COM terminals. Short-circuits can cause sensor problems.

Caution

1. Compressed air contains many kinds of drains such as water, oxidized oil, tar and other foreign substances. Dehumidify the compressed air by using an after-cooler or a dryer and improve the air quality, since those drains seriously impair the performance of the vacuum generator.
2. Do not use lubricators.
3. Rusts in the pipes may cause malfunction. Place a filter finer than 5μm ahead of the air supply port. It is recommended to carry out pipe flushing before operation and on a proper regular basis.
4. Do not give an excessive tensile strength and bending on a lead wire. Otherwise, breaking wire or damage on connector may be caused.
5. Avoid using the vacuum generator under the condition of corrosive and / or inflammable gas. Also do not use these gasses as a fluid medium.
6. The product is not drip/dust proof. Do not use the vacuum generator in location where it may be exposed to water, oil drop or dust.
7. Avoid sucking dust, salt and/or iron powders.
8. Do not operate blow-off solenoid valves during vacuum generation.
9. When replacing supply ports and vacuum ports cartridges, be sure to remove foreign substances sticking to cartridge seals; make sure cartridge fixing pins are properly inserted into the appropriate ports.
10. Use the shortest pipes as much as possible when piping vacuum components (concentrated exhaust, pilot air exhaust and supply units). Using long pipes can prevent vacuum units from performing properly.
11. Supply a stable DC power to the product.
12. Add a surge absorption circuit to relays or solenoid valves, etc. which are to be connected with output terminal and source terminal. Avoid any use which involves over 80mA in current.
13. Ground the FG terminal when using a unit power source such as switching current.
14. Output terminals and other terminals should not be short-circuited.
15. Do not apply excessive loads to external vacuum controller. Subjecting them to excessive loads can damage the equipment.

⚠ Safety Rules for Use

■ 1. Valve Operation Usage
→ Refer to that for VQ on page 249

■ 3. Name of Vacuum Sensor Parts and Operation Method
→ Refer to those for VQ on page 249

■ 4. Initial Setting Mode of Vacuum Switch
→ Refer to that for VQ on page 249

■ 5. Pressure Setting Mode of Vacuum Switch
→ Refer that for VQ on to page 250

■ 6. Vacuum Switch Functions
→ Refer to that for VQ on page 251

■ 7. Zero Point Adjustment and Error Message of Vacuum Switch
→ Refer to that for VQ on page 252

■ 8. How to replace Filter Elements
→ Refer to that for VQ on page 253

■ 11. How to replace Cartridge Fittings
→ Refer to that for VQ on page 254

⚠ SAFETY Instructions

This safety instructions aim to prevent personal injury and damage to properties by requiring proper use of PISCO products.

Be certain to follow ISO 4414 and JIS B 8370

ISO 4414 : Pneumatic fluid power…Recomendations for the application of equipment to transmission and control systems.

JIS B 8370 : General rules and safety requirements for systems and their components.

This safety instructions is classified into "Danger", "Warning" and "Caution" depending on the degree of danger or damages caused by improper use of PISCO products.

⚠ Danger	Hazardous conditions. It can cause death or serious personal injury.
⚠ Warning	Hazardous conditions depending on usages. Improper use of PISCO products can cause death or serious personal injury.
⚠ Caution	Hazardous conditions depending on usages. Improper use of PISCO products can cause personal injury or damages to properties.

⚠ Warning

1. Selection of pneumatic products
   ① A user who is a pneumatic system designer or has sufficient experience and technical expertise should select PISCO products.
   ② Due to wide variety of operating conditions and applications for PISCO products, carry out the analysis and evaluation on PISCO products. The pneumatic system designer is solely responsible for assuring that the user's requirements are met and that the application presents no health or safety hazards. All designers are required to fully understand the specifications of PISCO products and constitute all systems based on the latest catalog or information, considering any malfunctions.

2. Handle the pneumatic equipment with enough knowledge and experience
   ① Improper use of compressed air is dangerous. Assembly, operation and maintenance of machines using pneumatic equipment should be conducted by a person with enough knowledge and experience.

3. Do not operate machine / equipment or remove pneumatic equipment until safety is confirmed.
   ① Make sure that preventive measures against falling work-pieces or sudden movements of machine are completed before inspection or maintenance of these machine.
   ② Make sure the above preventive measures are completed. A compressed air supply and the power supply to the machine must be off, and also the compressed air in the systems must be exhausted.
   ③ Restart the machines with care after ensuring to take all preventive measures against sudden movements.

※. This safety instructions are subject to change without notice.

Disclaimer

1. PISCO does not take any responsibility for any incidental or indirect loss, such as production line stop, interruption of business, loss of benefits, personal injury, etc., caused by any failure on use or application of PISCO products.

2. PISCO does not take any responsibility for any loss caused by natural disasters, fires not related to PISCO products, acts by third parties, and intentional or accidental damages of PISCO products due to incorrect usage.

3. PISCO does not take any responsibility for any loss caused by improper usage of PISCO products such as exceeding the specification limit or not following the usage the published instructions and catalog allow.

4. PISCO does not take any responsibility for any loss caused by remodeling of PISCO products, or by combinational use with non-PISCO products and other software systems.

5. The damages caused by the defect of Pisco products shall be covered but limited to the full amount of the PISCO products paid by the customer.

⚠ SAFETY INSTRUCTION MANUAL

PISCO products are designed and manufactured for use in general industrial machines. Be sure to read and follow the instructions below.

⚠ Danger

1. Do not use PISCO products for the following applications.
   ① Equipment used for maintaining / handling human life and body.
   ② Equipment used for moving / transporting human.
   ③ Equipment specifically used for safety purposes.

⚠ Warning

1. Do not use PISCO products under the following conditions.
   ① Beyond the specifications or conditions stated in the catalog, or the instructions.
   ② Under the direct sunlight or outdoors.
   ③ Excessive vibrations and impacts.
   ④ Exposure / adhere to corrosive gas, inflammable gas, chemicals, seawater, water and vapor. *
   ＊Some products can be used under the condition above(④), refer to the details of specification and condition of each product.
2. Do not disassemble or modify PISCO products, which affect the performance, function, and basic structure of the product.
3. Turn off the power supply, stop the air supply to PISCO products, and make sure there is no residual air pressure in the pipes before maintenance and inspection.
4. Do not touch the release-ring of push-in fitting when there is a working pressure. The lock may be released by the physical contact, and tube may fly out or slip out.
5. Frequent switchover of compressed air may generate heat, and there is a risk of causing burn injury.
6. Avoid any load on PISCO products, such as a tensile strength, twisting and bending. Otherwise, there is a risk of causing damage to the products.
7. As for applications where threads or tubes swing / rotate, use Rotary Joints, High Rotary Joints or Multi-Circuit Rotary Block only. The other PISCO products can be damaged in these applications.
8. Use only Die Temperature Control Fitting Series, Tube Fitting Stainless SUS316 Series, Tube Fitting Stainless SUS316 Compression Fitting Series or Tube Fitting Brass Series under the condition of over 60℃ (140° F) water or thermal oil. Other PISCO products can be damaged by heat and hydrolysis under the condition above.
9. As for the condition required to dissipate static electricity or provide an antistatic performance, use EG series fitting and antistatic products only, and do not use other PISCO products. There is a risk that static electricity can cause system defects or failures.
10. Use only Fittings with a characteristic of spatter-proof such as Anti-spatter or Brass series in a place where flame and weld spatter is produced. There is a risk of causing fire by sparks.
11. Turn off the power supply to PISCO products, and make sure there is no residual air pressure in the pipes and equipment before maintenance. Follow the instructions below in order to ensure safety.
    ① Make sure the safety of all systems related to PISCO products before maintenance.
    ② Restart of operation after maintenance shall be proceeded with care after ensuring safety of the system by preventive measures against unexpected movements of machines and devices where pneumatic equipment is used.
    ③ Keep enough space for maintenance when designing a circuit.
12. Take safety measures such as providing a protection cover if there is a risk of causing damages or fires on machine / facilities by a fluid leakage.

⚠ Caution

1. Remove dusts or drain before piping. They may get into the peripheral machine / facilities and cause malfunction.
2. When inserting an ultra-soft tube into push-in fitting, make sure to place an Insert Ring into the tube edge. There is a risk of causing the escape of tube and a fluid leakage without using an Insert Ring.
3. The product incorporating NBR as seal rubber material has a risk of malfunction caused by ozone crack. Ozone exists in high concentrations in static elimination air, clean-room, and near the high-voltage motors, etc. As a countermeasure, material change from NBR to HNBR or FKM is necessary. Consult with PISCO for more information.
4. Special option "Oil-free" products may cause a very small amount of a fluid leakage. When a fluid medium is liquid or the products are required to be used in harsh environments, contact us for further information.
5. In case of using non-PISCO brand tubes, make sure the tolerance of the outer tube diameter is within the limits of Table 1.

●Table 1. Tube O.D. Tolerance

mm size	Nylon tube	Polyurethane tube
ø1.8mm	—	±0.05mm
ø3mm	—	±0.15mm
ø4mm	±0.1mm	±0.15mm
ø6mm	±0.1mm	±0.15mm
ø8mm	±0.1mm	±0.15mm
ø10mm	±0.1mm	±0.15mm
ø12mm	±0.1mm	±0.15mm
ø16mm	±0.1mm	±0.15mm

inch size	Nylon tube	Polyurethane tube
ø1/8	±0.1mm	±0.15mm
ø5/32	±0.1mm	±0.15mm
ø3/16	±0.1mm	±0.15mm
ø1/4	±0.1mm	±0.15mm
ø5/16	±0.1mm	±0.15mm
ø3/8	±0.1mm	±0.15mm
ø1/2	±0.1mm	±0.15mm
ø5/8	±0.1mm	±0.15mm

6. Instructions for Tube Insertion
   ① Make sure that the cut end surface of the tube is at right angle without a scratch on the surface and deformations.
   ② When inserting a tube, the tube needs to be inserted fully into the push-in fitting until the tubing edge touches the tube end of the fitting as shown in the figure below. Otherwise, there is a risk of leakage.

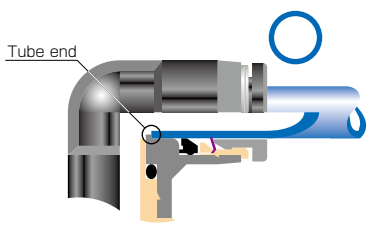

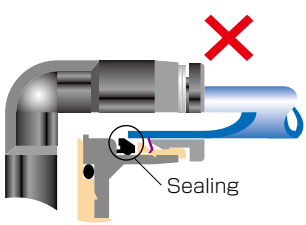

Tube is not fully inserted up to tube end.

   ③ After inserting the tube, make sure it is inserted properly and not to be disconnected by pulling it moderately.
   ※. When inserting tubes, Lock-claws may be hardly visible in the hole, observed from the front face of the release-ring. But it does not mean the tube will surely escape. Major causes of the tube escape are the followings;
   ①Shear drop of the lock-claws edge
   ②The problem of tube diameter (usually small)
   Therefore, follow the above instructions from ① to ③, even lock-claws is hardly visible.

7. Instructions for Tube Disconnection
   ① Make sure there is no air pressure inside of the tube, before disconnecting it.
   ② Push the release-ring of the push-in fitting evenly and deeply enough to pull out the tube toward oneself. By insufficient pushing of the release-ring, the tube may not be pulled out or damaged by scratch, and tube shavings may remain inside of the fitting, which may cause the leakage later.
8. Instructions for Installing a fitting
   ① When installing a fitting, use proper tools to tighten a hexagonal-column or an inner hexagonal socket. When inserting a hex key into the inner hexagonal socket of the fitting, be careful so that the tool does not touch lock-claws. The deformation of lock-claws may result in a poor performance of systems or an escape of the tube.
   ② Refer to Table 2 which shows the recommended tightening torque. Do not exceed these limits to tighten a thread. Excessive tightening may break the thread part or deform the gasket and cause a fluid leakage. Tightening thread with tightening torque lower than these limits may cause a loosened thread or a fluid leakage.
   ③ Adjust the tube direction while tightening thread within these limits, since some PISCO products are not rotatable after the installation.

●Table 2: Recommended tightening torque / Sealock color / Gasket materials

Thread type	Thread size	Tightening torque	Sealock color	Gasket materials
Metric thread	M3 × 0.5	0.7N·m	—	SUS304 NBR
	M5 × 0.8	1.0 ~ 1.5N·m		
	M6 × 1	2 ~ 2.7N·m		
	M3 × 0.5	0.5 ~ 0.6N·m		POM
	M5 × 0.8	1 ~ 1.5N·m		
	M6 × 0.75	0.8 ~ 1N·m		
	M8 × 0.75	1 ~ 2N·m		
Taper pipe thread	R1/8	7 ~ 9N·m	White	—
	R1/4	12 ~ 14N·m		
	R3/8	22 ~ 24N·m		
	R1/2	28 ~ 30N·m		
Unified thread	No.10-32UNF	1.0 ~ 1.5N·m	—	SUS304、NBR
National pipe thread taper	1/16-27NPT	7 ~ 9N·m	White	—
	1/8-27NPT	7 ~ 9N·m		
	1/4-18NPT	12 ~ 14N·m		
	3/8-18NPT	22 ~ 24N·m		
	1/2-14NPT	28 ~ 30N·m		

※ These values may differ for some products. Refer to each specification as well.

9. Instructions for removing a fitting
   ① When removing a fitting, use proper tools to loosen a hexagonal-column or an inner hex bolt.
   ② Remove the sealant stuck on the mating equipment. The remained sealant may get into the peripheral equipment and cause malfunctions.
10. Arrange piping avoiding any load on fittings and tubes such as twist, tensile, moment load, shaking and physical impact. These may cause damages to fittings, tube deformations, bursting and the escape of tubes.

⚠ Common Safety Instructions for Vacuum Series

Before selecting or using PISCO products, read the following instructions. Read the detailed instructions for individual series.

⚠ Warning

1. If there is a risk of dropping work-pieces during vacuum suction, take a safety measure against the falling of them.
2. Avoid supplying more than 0.1MPa pressure constantly in a vacuum circuit. Since vacuum generators are not explosive-proof, there is a risk of damaging the products.
3. Pay attention to drop of vacuum pressure caused by problems of the supplied air or the power supply. Decrease of suction force may lead to a danger of falling work-piece so that safety measure against the falling of them is necessary.
4. When more than 2 vacuum pads are plumbed on a single ejector and one of them has a suction problem such as vacuum leak, there is a risk of releasing work-pieces from the other pad due to the drop of the vacuum pressure.
5. Do not use in the way by which exhaust port is blocked or exhaust resistance is increased. Otherwise, there is a risk of no vacuum generation or a drop of the vacuum pressure.
6. Do not use the product in the circumstance of corrosive gas, inflammable gas, explosive gas, chemicals, seawater and vapor or do not expose the product to those. Never allow the product to suck those things.
7. Provide a protective cover on the products when it is exposed to sunlight.
8. Carry out clogging check for silencer element in an ejector and a vacuum filter periodically. Clogged element will be a cause to impair the performance or a cause of troubles.
9. Before replacing the element, thoroughly read and understand the method of filter replacement in the catalog.
10. Make sure the correct port of the vacuum generator by this catalog or marking on the products when plumbing. Wrong plumbing can be a risk to damage the product.
11. Supply clean air without sludge or dusts to an ejector. Do not lubricate by a lubricator. There is a risk of malfunction or performance impairing by impurities and oil contained in the compressed air.
12. Do not apply extreme tension, twist or bending forces on a lead wire. Otherwise, it may cause a wire breaking.
13. Locknut needs to be tightened firmly by hand. Do not use any tool to tighten. In case of using tools to tighten the locknut, it may damage the locknut or the product. Inadequate tightening may loosen the locknut and the initial setting can be changed.
14. Do not force the product to rotate or swing even its resin body is rotatable. It may cause damage to the product and a fluid leakage.
15. Do not supply an air pressure or a dry air to the products over the necessary amount. There is a risk of deteriorating rubber materials and malfunction due to oil.
16. Keep the product away from water, oil drops or dusts. These may cause malfunction. Take a proper measure to protect the product before the operation.

17. Do not use the product in the environment of inflammable or explosive gas / fluid. It can cause a fire or an explosion hazard.
18. Do not use the product in the circumstance of corrosive gas, inflammable gas, explosive gas, chemicals, seawater and vapor or do not expose the product to those. Otherwise, it may be a cause of malfunction.
19. Do not clean or paint the products by water or a solvent.

⚠ Caution

1. Operating pressure range in the catalog is the values during ejector operation. Secure the described value of the supplied air, taking a drop of the pressure into consideration. Insufficient pressure, which does not satisfy the spec, may cause abnormal noise, unstable performance and may negatively affect sensors, bringing troubles at last.
2. Effective cross-section area of the air supply side needs to be three times as large as effective cross-section area of the nozzle bore. When arranging piping or selecting PISCO products, secure required effective cross-section area. Insufficient supply pressure may be a cause to impair performance.
3. A Shorter distance of plumbing with a wider bore is preferable at vacuum system side. A long plumbing with a small bore may result in slow response time at the time of releasing work-piece as well as in failure to secure adequate suction flow rate.
4. Plumb a vacuum switch and an ejector with vacuum switch at the end of vacuum system as much as possible. A long distance between a vacuum switch and a vacuum system end may increase plumbing resistance which may lead to a high vacuum level at the sensor even when no suctioning and a malfunction of vacuum switch. Make sure to evaluate the products in an actual system.
5. Refer to “4. Instructions for Installing a fitting” and “5. Instructions for Removing a fitting” under “Common Safety Instructions for Fittings” , when installing or removing Fittings.
6. Refer to “Common Safety Instructions for Pressure Sensors” and “Detailed Safety Instructions” for the handling of digital vacuum switch sensor.
7. Refer to “Common Safety Instructions for Mechanical Vacuum Sensor” for the handling of mechanical vacuum switch.
8. The material of plastic filter cover for VG, VK, VJ, VZ and VX series is PCTG. Avoid the adherence of Chemicals below to the products, and do not use them under those chemical environments.

● Table Chemical Name

Chemical Name
Thinner
Carbon tetrachloride
Chloroform
Acetate
Aniline
Cyclohexane
Trichloroethylene
Sulfuric acid
Lactic acid
Water soluble cutting oil (alkaline)

* There are more chemicals which should be avoided. Contact us for the use under chemical circumstance.

9. The material of plastic filter cover for VQ and VFU series is PA. Avoid the adherence of chemicals below to the products, and do not use them under those chemical environments.

● Table Chemical Name

Chemical Name
Methanol
Ethanol
Nitric acid
Sulfuric acid
Hydrochloric acid
Lactic acid
Acetone
Chloroform
Aniline
Trichloroethylene
Hydrogen peroxide

* There are more chemicals which should be avoided. Contact us for the use under chemical circumstance.

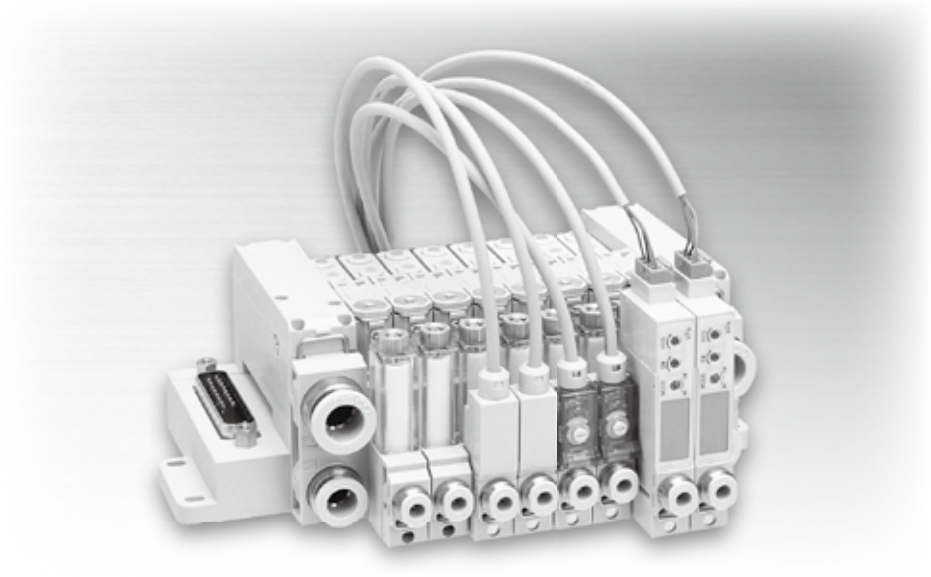

External Vacuum Controller with compact and lightweight body, achieving shorter blow-off time.

External Vacuum Controller VZP Series

- *Small in size and lightweight External Vacuum Controller dedicated to manifold.*
- *Bundled wiring of the suction and Blow-off solenoid valve.*

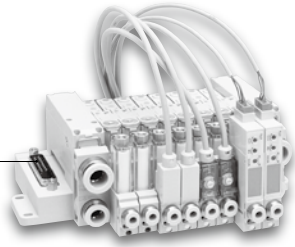

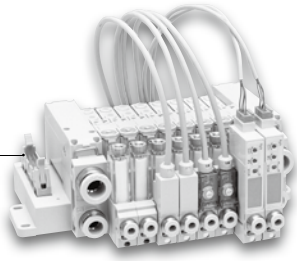

Characteristics

- *Wide variety of combinations enables to meet various applications. Complex Vacuum Generator, VZ Series, is also available. (P.256).*
- *Energy saving. Current consumption of valve is saved at 0.55W*
- *Various kinds of vacuum sensors for wide range of applications*

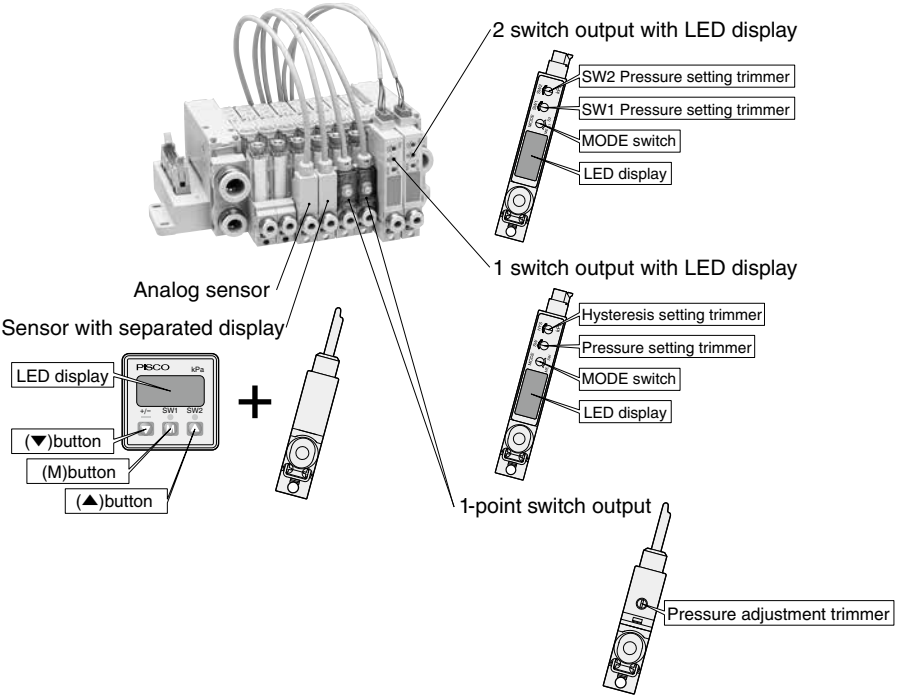

- *User-friendly structure considering easy maintenance*
- *Push-In Fitting and Female thread are standardized on vacuum port.*

Circuit diagram

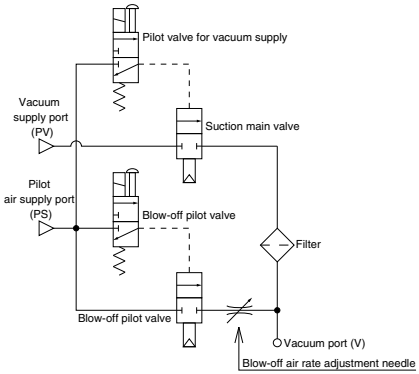

Without vacuum switch

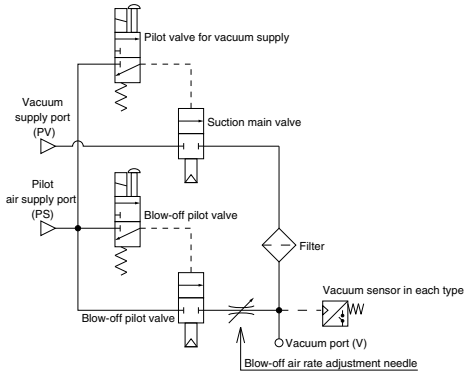

With Vacuum switch

Electric Circuit (Solenoid valve)

Sub-D connector

9-pin

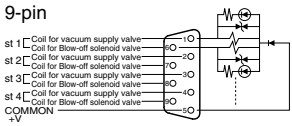

25-pin

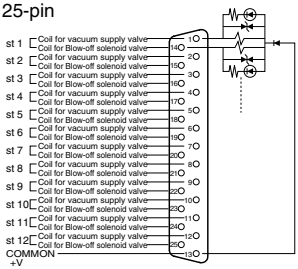

Flat cable connector

10-pin

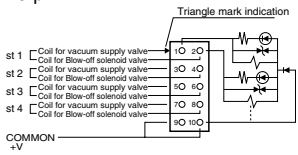

(Note: Common (+V) pins No. 9 and No.10 are connected)

20-pin

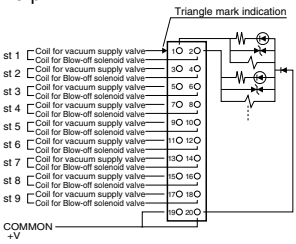

(Note: Common (+V) pins No.19 and No.20 are connected)

26-pin

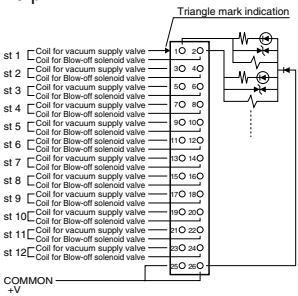

(Note: Common (+V) pins No.25 and No.26 are connected)

Model Designation of Manifold Type (Example)

VZP - 4 6 1 - D24 - DW - M 05 - D 25

- VZP: External Vacuum Controller dedicated to a manifold
- ① Vacuum port
- ② Air supply port
- ③ Vacuum supply port
- ④ Vacuum switch
- ⑤ No. of stations
- ⑥ Wiring type
- ⑦ No. of connector pins

① Vacuum port (Applicable tube size)

Code	4	Code	6	Code	5
Tube dia.(mm)	ø4 (Push-In Fitting)	Tube dia.(mm)	ø6 (Push-In Fitting)	Tube dia.(mm)	M5×0.8 (Female thread)
Code	0				
Tube dia.(mm)	When different vacuum ports are mixed on a manifold (Fill in the details on Specification Order Form)				

② Air supply port (Applicable tube size)

Code	4	6	8
Tube dia.(mm)	ø4 (Push-In Fitting)	ø6 (Push-In Fitting)	ø8 (Push-In Fitting)

③ Vacuum supply port (Applicable tube size)

Code	6	8	1
Tube dia.(mm)	ø6 (Push-In Fitting)	ø8 (Push-In Fitting)	ø10 (Push-In Fitting)

④ Vacuum switch

Code	No code	DW
Sensor	Without vacuum switch	2 switch output with LED display
Code	DA	S
Sensor	Pressure sensor with LED display (Analog and 1 switch output)	1 switch output without display
Code	V1	V2
Sensor	Analog output for negative pressure	Separated type LED pressure display + negative pressure analog sensor
Code	R1	R2
Sensor	Compound pressure analog sensor	Separated type LED pressure display + compound pressure analog sensor
Code	K	
Sensor	When different switches are mixed on a manifold (Fill in the details on Specification Order Form)	

⑤ No. of stations

Code	02	03	04	05	06	07	08	09	10	11	12
No. of stations	2	3	4	5	6	7	8	9	10	11	12

※ . Allowable station numbers of simultaneous operation differs by combination of port size. Please contact us for details.

⑥ Wiring type

Code	F	D
Connector	Flat cable connector	Sub-D connector

⑦ No. of connector pins

Code	20	26	25
No. of pin	20-pin Flat cable connector (Max. 9 stations)	26-pin Flat cable connector (Max. 12 stations)	25-pin Sub-D connector (Max. 12 stations)
Code	No code		
No. of pin	Not specified (The suitable connector comes, according to Wiring type and No. of stations. See below). (※)		

※ . In case of a flat cable connector
2 to 4 stations: 10-pin Flat cable connector
5 to 9 stations: 20-pin Flat cable connector
10 to 12 stations: 26-pin Flat cable connector
In case of a sub-D connector
2 to 4 stations: 9-pin Sub-D connector
5 to 12 stations: 25-pin Sub-D connector

Model Designation of Manifold-base Only (Example)

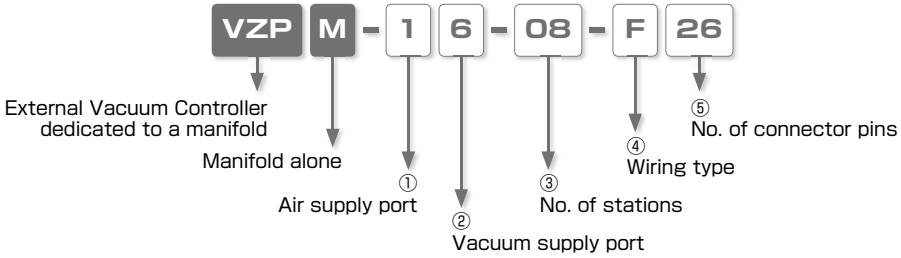

① Air supply port (Applicable tube size)

Code	4	6	8
Tube dia.(mm)	ø4 (Push-In Fitting)	ø6 (Push-In Fitting)	ø8 (Push-In Fitting)

② Vacuum port (Applicable tube size)

Code	6	8	1
Tube dia.(mm)	ø6 (Push-In Fitting)	ø8 (Push-In Fitting)	ø10 (Push-In Fitting)

③ No. of stations

Code	02	03	04	05	06	07	08	09	10	11	12
No. of stations	2	3	4	5	6	7	8	9	10	11	12

④ Wiring type

Code	F	D
Connector	Flat cable connector	Sub-D connector

⑤ No. of connector pin

Code	20	26	25
No. of pin.	20-pin Flat cable connector (Max. 9 stations)	26-pin Flat cable connector (Max. 12 stations)	25-pin Sub-D connector (Max. 12 stations)
Code	No code		
No. of pin.	Not specified (The suitable connector comes, according to Wiring type and No. of stations. See below). (※)		

※. In case of a flat cable connector
2 to 4 stations: 10-pin Flat cable connector
5 to 9 stations: 20-pin Flat cable connector
10 to 12 stations: 26-pin Flat cable connector
In case of a sub-D connector
2 to 4 stations: 9-pin Sub-D connector
5 to 12 stations: 25-pin Sub-D connector

Model Designation of Mounting Valve Unit (Example)

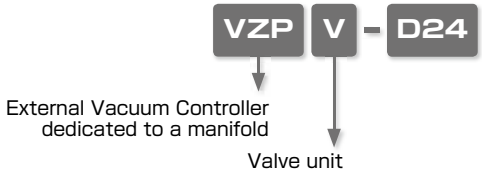

Model Designation of Manifold Installation Top-Mounting Unit Type (Example)

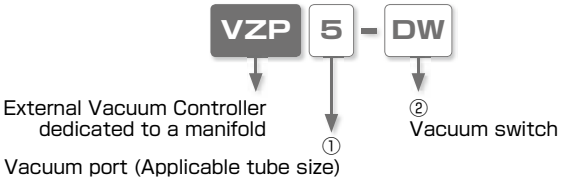

① Vacuum port (Applicable tube size)

Code	4	Code	6	Code	5
Tube dia.(mm)	ø4 (Push-In Fitting)	Tube dia.(mm)	ø6 (Push-In Fitting)	Thread size.(mm)	M5×0.8 (Female thread)

② Vacuum switch

Code	No code	DW
Sensor	Without vacuum switch	2 switch output with LED display
Code	DA	S
Sensor	Pressure sensor with LED display (Analog and 1 switch output)	1 switch output without display
Code	V1	V2
Sensor	Analog output for negative pressure	Separated type LED pressure display + negative pressure analog sensor
Code	R1	R2
Sensor	Compound pressure analog sensor	Separated type LED pressure display + compound pressure analog sensor

Specification Order Form (example)

		–	Vacuum port (V) ①	Air supply port (PS) ②	Vacuum supply port (PV) ③	–	Voltage (V)	–	Vacuum switch ④	–	No. of stations ⑤	Wiring type ⑥ F	No. of connector pins ⑦
VZP		–	4	1	1	–	**D24**	–	K	–	08		20
L	St.1	–				–		–		–			
	St.2	–				–		–		–			
	St.3	–				–		–	V1	–			
⬆	St.4	–				–		–	V1	–			
	St.5	–				–		–	S	–			
St. no.	St.6	–				–		–	S	–			
	St.7	–				–		–	DA	–			
	St.8	–				–		–	DA	–			
⬇	St.9	–				–		–		–			
	St.10	–				–		–		–			
	St.11	–				–		–		–			
R	St.12	–				–		–		–			

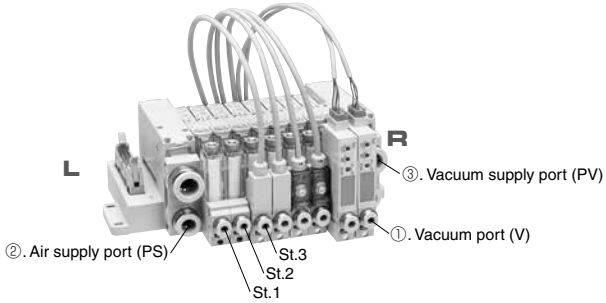

※ . Station no. is arranged St.1, St.2 ··· St.12 from L side.

External Vacuum Controller **VZP** Series Specification Order Form

To: NIHON PISCO CO., Ltd.

Name:

Order No.:

Date:

Request EX-W PISCO Date: Quantity:

External Vacuum Controller for a vacuum pump		–	Vacuum port (V) ①	Air supply port (PS) ②	Vacuum supply port (PV) ③	–	Voltage (V)	–	Vacuum switch ④	–	No. of stations ⑤	Wiring type ⑥	No. of connector pins ⑦
VZP		–				–	**D24**	–		–			
L	St.1	–				–		–		–			
	St.2	–				–		–		–			
	St.3	–				–		–		–			
⬆	St.4	–				–		–		–			
	St.5	–				–		–		–			
St. no.	St.6	–				–		–		–			
	St.7	–				–		–		–			
	St.8	–				–		–		–			
⬇	St.9	–				–		–		–			
	St.10	–				–		–		–			
	St.11	–				–		–		–			
R	St.12	–				–		–		–			

※1. Refer to the previous page to fill in the form.
※2. Copy this page and use.
※3. Use this specification order form when ordering different specifications of mounting units.

Specification (Supply pressure)

Fluid medium	Air
Operating pressure range	0.3 ~ 0.7 MPa
Operating temp. range	5 ~ 50°C
Operating vacuum range	0 ~ -100kPa

Solenoid valve

Pilot valves

Item	Pilot valve for vacuum supply	Blow-off solenoid valve
Operating system	Direct operation	
Valve construction	Elastic seal, Poppet valve	
Rated voltage	DC24V	
Allowable voltage range	DC21.6 ~ DC26.4V	
Surge protection circuit	Surge absorber	
Power consumption	0.55W (With LED)	
Operation indicator lamp	Coil excitation: Red LED ON	Coil excitation: Yellow-green LED ON
Manual operation	Push-lock button	
Wiring type	Sub-D connector / Flat cable connector	

Switchover valve

Item		Suction solenoid valve		Blow-off solenoid valve
Operating system		Pneumatic operation by pilot valve		
Valve construction		Elastic seal, Poppet valve		
Valve function		Single solenoid	Double solenoid	Single solenoid
Valve unit type		N.C. (Normally closed)		
Proof pressure		1.05MPa		
Lubrication		Not required		
Effective sectional area (Cv)		4.5mm² (0.24)		3.5mm² (0.19)
Response time	OFF → ON	10msec	10msec	10msec
	ON → OFF	15msec	10msec	15msec

Vacuum switch

Item \ Specification		With LED display		No display	Separated display with analog	Analog
		2 switch output	1 switch output	1 switch output		
Current consumption		40mA		20mA	50mA	20mA
Pressure detection		Diffused semiconduction pressure switch				Diffused semiconduction pressure switch
Operating pressure range		-100 ~ 0kPa				-100 ~ 0kPa
Pressure setting range		-99 ~ 0kPa			-999 ~ 999counts	
Proof pressure		0.2MPa				0.2MPa
Operating temp. range		0 ~ 50°C (No freezing)		-10 ~ 60°C (No freezing)	-10 ~ 50°C (No freezing)	-10 ~ 60°C (No freezing)
Operating humidity range		35 ~ 85%RH (No dew condensation)				
Rated voltage		12 ~ 24VDC ±10% Ripple (P-P) 10% max.		DC10.8 ~ 30V(Ripple voltage included)		
Protective structure		IEC standard IP40 equiv.				
No. of switch output		2	1		2	
Switching action accuracy		±3%F.S. max. (at Ta=25°C)				
Differential accuracy		Fixed	Variable	Fixed	Variable	
Switch output		NPN open collector				
Analog output	Output voltage		1 ~ 5V		1 ~ 5 V	
	Zero-point voltage		1±0.1V		1±0.1 V	
	Span voltage		4±0.1V		4±0.1 V	
	Output current		1mA max.		0.5mA max.	1mA max.
	LIN／HYS		±0.5%F.S. max.		±0.5%F.S. max.	
Indication		0 ~ -99kPa (2-digit red LED display)			3-digit red LED display	
Display frequency		About 4 times/sec.			About 4 times/sec.	
Indication accuracy		±3%F.S. ±2 digit			±1%F.S.	
Sensor resolution		1 digit			1 digit	
Operational indication		SW1: Red LED turns ON, when pressure is above setting.			SW1: Green LED turns ON, when pressure is above setting.	
		SW2: Green LED turns ON, when pressure is above setting.			SW2: Red LED turns ON, when pressure is above setting.	

Filter specification

Element material	PVF（Polyvinyl formal）
Filtering capacity	10μm
Filter surface area	660mm^2

Blow-off function

Item	Blow-off valve
Blow-off air rate	0 ~ 50ℓ/min(ANR) (When supply pressure is at 0.5MPa)

Circuit diagram (Solenoid valve)

Refer to the circuit diagram for VZ on page 269

Applicable Tube and Related Products

Polyurethane Tube (1. Piping products catalog P.596)

■ Polyurethane Tube is for the general pneumatic piping and suitable for a compact piping.。

Nylon Tube (1. Piping products catalog P.608)

■ Nylon Tube is for the general pneumatic piping and suitable for a high-pressure fluid up to 1.5MPa (NB tube: 1.0MPa).

Vacuum Tube (1. Piping products catalog P.612)

■ Vacuum Tube is a ultra-soft tube and suitable for piping of vacuum generators or actuators.

Vacuum Pads

VZP With Sub-D connector

Model code : VZP-□□□-D24-□-M□-D□

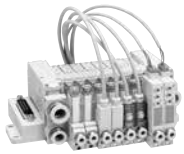

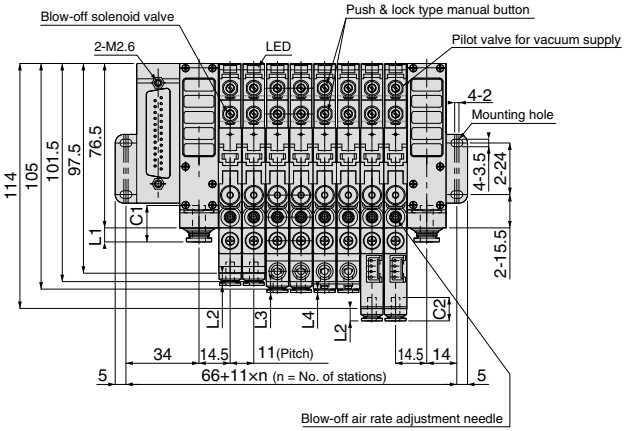

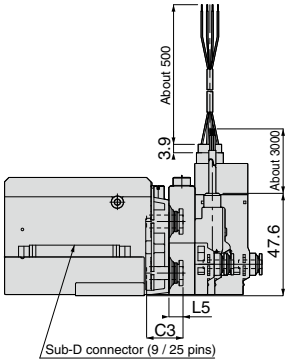

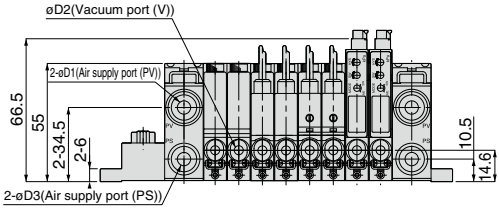

Dimension of Fitting

Unit: mm

Air supply port (PV) ø	C1	L1	Vacuum port (V) øD2	C2	L2	L3	L4	Air supply port (PS) øD	C3	L5
6	17	6.6	4	10.9	5.8	5.1	1.6	4	14.9	2
8	18.2	8.1	6	9.8	8.7	8	4.5	6	17	6.6
10	20.7	11.7	M5(Female thread)	–	4	3.3	-0.2	8	18.2	8.1

VZP With Flat cable connector

Model code : VZP-□□□-D24-□-M□-F□

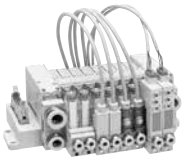

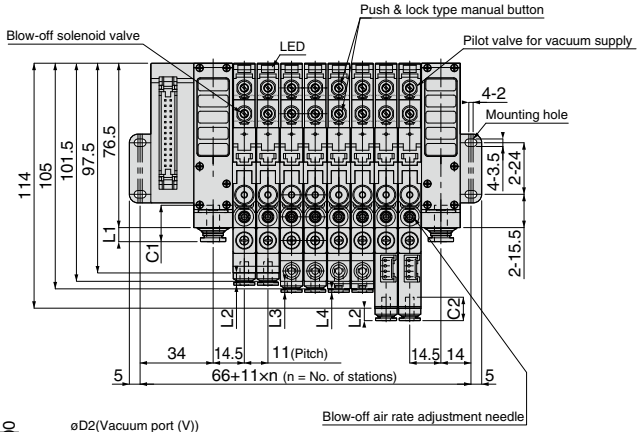

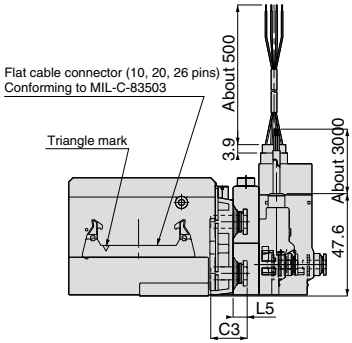

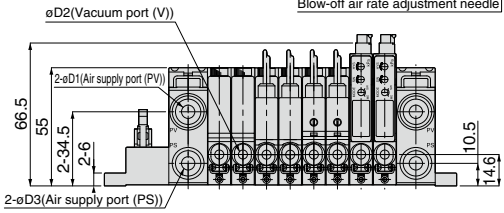

Dimension of Fitting

Unit: mm

Air supply port (PV) ø1	C1	L1	Vacuum port (V) øD	C2	L2	L3	L4	Air supply port (PS) øD	C3	L5
6	17	6.6	4	10.9	5.8	5.1	1.6	4	14.9	2
8	18.2	8.1	6	9.8	8.7	8	4.5	6	17	6.6
10	20.7	11.7	M5(Female thread)	–	4	3.3	-0.2	8	18.2	8.1

⚠ Detailed Safety Instructions

Before using PISCO products, be sure to read "Safety Instructions" and "Safety Instruction Manual" on page 35-39 and "Common Safety Instructions for Vacuum Series" on page 47-49.

Warning

1. For the operation of the valve, make sure that the leakage current is less than 1mA. Leakage current larger than that may cause malfunction.
2. External Vacuum Controller VZP permits some air leakage. When vacuum retention for a long period of time is required, provide an appropriate safety measure.
3. The coil in a pilot solenoid valve generates heat under the following ① to ③ conditions. The heat may cause dropping life cycle, malfunctions, getting burnt or damaging peripheral machines.
   Contact us when the power is applied to the vacuum generator under the following conditions:
   ① The power is continuously ON for over 2 hours.
   ② High-cycle operation.
   ③ Even when intermittent running of the generator is carried out, the total operation time per day is longer than non-operation time.
4. When the electricity is applied to valves continuously for a long time, the coils generate heat. It may cause dropping life cycle, malfunctions, getting burnt or damaging peripheral machines due to the heat.
5. When a mounting unit is removed from a manifold-base, make sure the residual air is exhausted completely.
6. Avoid excessive vibration and impact on the vacuum generator. Otherwise, it may cause malfunctions or damaging. (Operate the product with acceleration less than 49m/s2)

Caution

1. Do not give an excessive tensile strength and bending on a lead wire. Otherwise, breaking wire or damage on connector may be caused.
2. Compressed air contains many kinds of drains such as water, oxidized oil, tar and other foreign substances. Dehumidify the compressed air by using an after-cooler or a dryer and improve the air quality, since those drains seriously impair the performance of the vacuum generator.
3. Do not use lubricators.
4. Foreign substances such as rusts or dust in the pipes may cause malfunction. Place a filter finer than 5μm ahead of the air supply port. It is recommended to carry out pipe flushing before operation and on a proper regular basis.
5. Avoid using the vacuum generator under the condition of corrosive and / or inflammable gas. Also do not use these gasses as a fluid medium.
6. When replacing vacuum ports cartridges, be sure to remove foreign substances sticking to cartridge seals; make sure cartridge fixing pins are properly inserted into the appropriate ports. Read "Safety Rules for Use" before replacement.
7. Carry out the maintenance of the clogging of silencer element on manifold-base periodically. It may cause dropping the performance or troubles by the clogging.
8. When installing each mounting unit on a manifold, be sure to remove foreign substances sticking to seals; make sure cartridge fixing pins are properly inserted into the appropriate ports. Read "Safety Rules for Use" before replacement.
9. Arrange connector wiring of Sub-D or Flat cable correctly, after understanding the circuit well.
10. Read and understand "Safety Rules for Manifold Type" before operation, since manifold type may have a performance drop or some troubles by use condition.

⚠ Safety Rules for Use

■ 1. Safety Rules for Manifold Type
→ Refer to that for VZ on page 277

■ 2. How to install the product
→ Refer to that for VZ on page 277

■ 3. Handling Method of Vacuum Switch
→ Refer to that for VZ on page 277

■ 4. How to adjust Blow-off Air
→ Refer to that for VZ on page 277

■ 5. How to replace Filter Elements
→ Refer to that for VZ on page 278

■ 6. How to replace Silencer Elements
→ Refer to that for VZ on page 278

■ 7. How to install and uninstall Mounting Unit
→ Refer to that for VZ on page 280

■ 8. How to replace Cartridge Fittings
→ Refer to that for VZ on page 280

⚠ SAFETY Instructions

This safety instructions aim to prevent personal injury and damage to properties by requiring proper use of PISCO products.

Be certain to follow ISO 4414 and JIS B 8370

ISO 4414 : Pneumatic fluid power…Recomendations for the application of equipment to transmission and control systems.

JIS B 8370 : General rules and safety requirements for systems and their components.

This safety instructions is classified into "Danger", "Warning" and "Caution" depending on the degree of danger or damages caused by improper use of PISCO products.

⚠ Danger	Hazardous conditions. It can cause death or serious personal injury.
⚠ Warning	Hazardous conditions depending on usages. Improper use of PISCO products can cause death or serious personal injury.
⚠ Caution	Hazardous conditions depending on usages. Improper use of PISCO products can cause personal injury or damages to properties.

⚠ Warning

1. Selection of pneumatic products
   ① A user who is a pneumatic system designer or has sufficient experience and technical expertise should select PISCO products.
   ② Due to wide variety of operating conditions and applications for PISCO products, carry out the analysis and evaluation on PISCO products. The pneumatic system designer is solely responsible for assuring that the user's requirements are met and that the application presents no health or safety hazards. All designers are required to fully understand the specifications of PISCO products and constitute all systems based on the latest catalog or information, considering any malfunctions.

2. Handle the pneumatic equipment with enough knowledge and experience
   ① Improper use of compressed air is dangerous. Assembly, operation and maintenance of machines using pneumatic equipment should be conducted by a person with enough knowledge and experience.

3. Do not operate machine / equipment or remove pneumatic equipment until safety is confirmed.
   ① Make sure that preventive measures against falling work-pieces or sudden movements of machine are completed before inspection or maintenance of these machine.
   ② Make sure the above preventive measures are completed. A compressed air supply and the power supply to the machine must be off, and also the compressed air in the systems must be exhausted.
   ③ Restart the machines with care after ensuring to take all preventive measures against sudden movements.

※. This safety instructions are subject to change without notice.

Disclaimer

1. PISCO does not take any responsibility for any incidental or indirect loss, such as production line stop, interruption of business, loss of benefits, personal injury, etc., caused by any failure on use or application of PISCO products.

2. PISCO does not take any responsibility for any loss caused by natural disasters, fires not related to PISCO products, acts by third parties, and intentional or accidental damages of PISCO products due to incorrect usage.

3. PISCO does not take any responsibility for any loss caused by improper usage of PISCO products such as exceeding the specification limit or not following the usage the published instructions and catalog allow.

4. PISCO does not take any responsibility for any loss caused by remodeling of PISCO products, or by combinational use with non-PISCO products and other software systems.

5. The damages caused by the defect of Pisco products shall be covered but limited to the full amount of the PISCO products paid by the customer.

⚠ SAFETY INSTRUCTION MANUAL

PISCO products are designed and manufactured for use in general industrial machines. Be sure to read and follow the instructions below.

⚠ Danger

1. Do not use PISCO products for the following applications.
   ① Equipment used for maintaining / handling human life and body.
   ② Equipment used for moving / transporting human.
   ③ Equipment specifically used for safety purposes.

⚠ Warning

1. Do not use PISCO products under the following conditions.
   ① Beyond the specifications or conditions stated in the catalog, or the instructions.
   ② Under the direct sunlight or outdoors.
   ③ Excessive vibrations and impacts.
   ④ Exposure / adhere to corrosive gas, inflammable gas, chemicals, seawater, water and vapor. *
   ＊Some products can be used under the condition above(④), refer to the details of specification and condition of each product.
2. Do not disassemble or modify PISCO products, which affect the performance, function, and basic structure of the product.
3. Turn off the power supply, stop the air supply to PISCO products, and make sure there is no residual air pressure in the pipes before maintenance and inspection.
4. Do not touch the release-ring of push-in fitting when there is a working pressure. The lock may be released by the physical contact, and tube may fly out or slip out.
5. Frequent switchover of compressed air may generate heat, and there is a risk of causing burn injury.
6. Avoid any load on PISCO products, such as a tensile strength, twisting and bending. Otherwise, there is a risk of causing damage to the products.
7. As for applications where threads or tubes swing / rotate, use Rotary Joints, High Rotary Joints or Multi-Circuit Rotary Block only. The other PISCO products can be damaged in these applications.
8. Use only Die Temperature Control Fitting Series, Tube Fitting Stainless SUS316 Series, Tube Fitting Stainless SUS316 Compression Fitting Series or Tube Fitting Brass Series under the condition of over 60℃ (140° F) water or thermal oil. Other PISCO products can be damaged by heat and hydrolysis under the condition above.
9. As for the condition required to dissipate static electricity or provide an antistatic performance, use EG series fitting and antistatic products only, and do not use other PISCO products. There is a risk that static electricity can cause system defects or failures.
10. Use only Fittings with a characteristic of spatter-proof such as Anti-spatter or Brass series in a place where flame and weld spatter is produced. There is a risk of causing fire by sparks.
11. Turn off the power supply to PISCO products, and make sure there is no residual air pressure in the pipes and equipment before maintenance. Follow the instructions below in order to ensure safety.
    ① Make sure the safety of all systems related to PISCO products before maintenance.
    ② Restart of operation after maintenance shall be proceeded with care after ensuring safety of the system by preventive measures against unexpected movements of machines and devices where pneumatic equipment is used.
    ③ Keep enough space for maintenance when designing a circuit.
12. Take safety measures such as providing a protection cover if there is a risk of causing damages or fires on machine / facilities by a fluid leakage.

⚠ Caution

1. Remove dusts or drain before piping. They may get into the peripheral machine / facilities and cause malfunction.
2. When inserting an ultra-soft tube into push-in fitting, make sure to place an Insert Ring into the tube edge. There is a risk of causing the escape of tube and a fluid leakage without using an Insert Ring.
3. The product incorporating NBR as seal rubber material has a risk of malfunction caused by ozone crack. Ozone exists in high concentrations in static elimination air, clean-room, and near the high-voltage motors, etc. As a countermeasure, material change from NBR to HNBR or FKM is necessary. Consult with PISCO for more information.
4. Special option "Oil-free" products may cause a very small amount of a fluid leakage. When a fluid medium is liquid or the products are required to be used in harsh environments, contact us for further information.
5. In case of using non-PISCO brand tubes, make sure the tolerance of the outer tube diameter is within the limits of Table 1.

●Table 1. Tube O.D. Tolerance

mm size	Nylon tube	Polyurethane tube
ø1.8mm	—	±0.05mm
ø3mm	—	±0.15mm
ø4mm	±0.1mm	±0.15mm
ø6mm	±0.1mm	±0.15mm
ø8mm	±0.1mm	±0.15mm
ø10mm	±0.1mm	±0.15mm
ø12mm	±0.1mm	±0.15mm
ø16mm	±0.1mm	±0.15mm

inch size	Nylon tube	Polyurethane tube
ø1/8	±0.1mm	±0.15mm
ø5/32	±0.1mm	±0.15mm
ø3/16	±0.1mm	±0.15mm
ø1/4	±0.1mm	±0.15mm
ø5/16	±0.1mm	±0.15mm
ø3/8	±0.1mm	±0.15mm
ø1/2	±0.1mm	±0.15mm
ø5/8	±0.1mm	±0.15mm

6. Instructions for Tube Insertion
   ① Make sure that the cut end surface of the tube is at right angle without a scratch on the surface and deformations.
   ② When inserting a tube, the tube needs to be inserted fully into the push-in fitting until the tubing edge touches the tube end of the fitting as shown in the figure below. Otherwise, there is a risk of leakage.

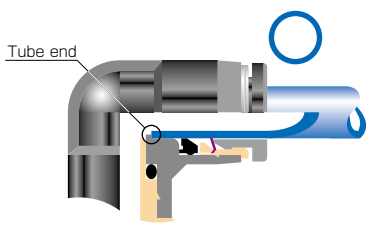

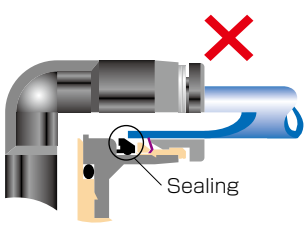

Tube is not fully inserted up to tube end.

   ③ After inserting the tube, make sure it is inserted properly and not to be disconnected by pulling it moderately.
   ※. When inserting tubes, Lock-claws may be hardly visible in the hole, observed from the front face of the release-ring. But it does not mean the tube will surely escape. Major causes of the tube escape are the followings;
   ①Shear drop of the lock-claws edge
   ②The problem of tube diameter (usually small)
   Therefore, follow the above instructions from ① to ③, even lock-claws is hardly visible.

7. Instructions for Tube Disconnection
   ① Make sure there is no air pressure inside of the tube, before disconnecting it.
   ② Push the release-ring of the push-in fitting evenly and deeply enough to pull out the tube toward oneself. By insufficient pushing of the release-ring, the tube may not be pulled out or damaged by scratch, and tube shavings may remain inside of the fitting, which may cause the leakage later.
8. Instructions for Installing a fitting
   ① When installing a fitting, use proper tools to tighten a hexagonal-column or an inner hexagonal socket. When inserting a hex key into the inner hexagonal socket of the fitting, be careful so that the tool does not touch lock-claws. The deformation of lock-claws may result in a poor performance of systems or an escape of the tube.
   ② Refer to Table 2 which shows the recommended tightening torque. Do not exceed these limits to tighten a thread. Excessive tightening may break the thread part or deform the gasket and cause a fluid leakage. Tightening thread with tightening torque lower than these limits may cause a loosened thread or a fluid leakage.
   ③ Adjust the tube direction while tightening thread within these limits, since some PISCO products are not rotatable after the installation.

●Table 2: Recommended tightening torque / Sealock color / Gasket materials

Thread type	Thread size	Tightening torque	Sealock color	Gasket materials
Metric thread	M3 × 0.5	0.7N·m	—	SUS304 NBR
	M5 × 0.8	1.0 ~ 1.5N·m		
	M6 × 1	2 ~ 2.7N·m		
	M3 × 0.5	0.5 ~ 0.6N·m		POM
	M5 × 0.8	1 ~ 1.5N·m		
	M6 × 0.75	0.8 ~ 1N·m		
	M8 × 0.75	1 ~ 2N·m		
Taper pipe thread	R1/8	7 ~ 9N·m	White	—
	R1/4	12 ~ 14N·m		
	R3/8	22 ~ 24N·m		
	R1/2	28 ~ 30N·m		
Unified thread	No.10-32UNF	1.0 ~ 1.5N·m	—	SUS304、NBR
National pipe thread taper	1/16-27NPT	7 ~ 9N·m	White	—
	1/8-27NPT	7 ~ 9N·m		
	1/4-18NPT	12 ~ 14N·m		
	3/8-18NPT	22 ~ 24N·m		
	1/2-14NPT	28 ~ 30N·m		

※ These values may differ for some products. Refer to each specification as well.

9. Instructions for removing a fitting
   ① When removing a fitting, use proper tools to loosen a hexagonal-column or an inner hex bolt.
   ② Remove the sealant stuck on the mating equipment. The remained sealant may get into the peripheral equipment and cause malfunctions.
10. Arrange piping avoiding any load on fittings and tubes such as twist, tensile, moment load, shaking and physical impact. These may cause damages to fittings, tube deformations, bursting and the escape of tubes.

⚠ Common Safety Instructions for Vacuum Series

Before selecting or using PISCO products, read the following instructions. Read the detailed instructions for individual series.

⚠ Warning

1. If there is a risk of dropping work-pieces during vacuum suction, take a safety measure against the falling of them.
2. Avoid supplying more than 0.1MPa pressure constantly in a vacuum circuit. Since vacuum generators are not explosive-proof, there is a risk of damaging the products.
3. Pay attention to drop of vacuum pressure caused by problems of the supplied air or the power supply. Decrease of suction force may lead to a danger of falling work-piece so that safety measure against the falling of them is necessary.
4. When more than 2 vacuum pads are plumbed on a single ejector and one of them has a suction problem such as vacuum leak, there is a risk of releasing work-pieces from the other pad due to the drop of the vacuum pressure.
5. Do not use in the way by which exhaust port is blocked or exhaust resistance is increased. Otherwise, there is a risk of no vacuum generation or a drop of the vacuum pressure.
6. Do not use the product in the circumstance of corrosive gas, inflammable gas, explosive gas, chemicals, seawater and vapor or do not expose the product to those. Never allow the product to suck those things.
7. Provide a protective cover on the products when it is exposed to sunlight.
8. Carry out clogging check for silencer element in an ejector and a vacuum filter periodically. Clogged element will be a cause to impair the performance or a cause of troubles.
9. Before replacing the element, thoroughly read and understand the method of filter replacement in the catalog.
10. Make sure the correct port of the vacuum generator by this catalog or marking on the products when plumbing. Wrong plumbing can be a risk to damage the product.
11. Supply clean air without sludge or dusts to an ejector. Do not lubricate by a lubricator. There is a risk of malfunction or performance impairing by impurities and oil contained in the compressed air.
12. Do not apply extreme tension, twist or bending forces on a lead wire. Otherwise, it may cause a wire breaking.
13. Locknut needs to be tightened firmly by hand. Do not use any tool to tighten. In case of using tools to tighten the locknut, it may damage the locknut or the product. Inadequate tightening may loosen the locknut and the initial setting can be changed.
14. Do not force the product to rotate or swing even its resin body is rotatable. It may cause damage to the product and a fluid leakage.
15. Do not supply an air pressure or a dry air to the products over the necessary amount. There is a risk of deteriorating rubber materials and malfunction due to oil.
16. Keep the product away from water, oil drops or dusts. These may cause malfunction. Take a proper measure to protect the product before the operation.

17. Do not use the product in the environment of inflammable or explosive gas / fluid. It can cause a fire or an explosion hazard.
18. Do not use the product in the circumstance of corrosive gas, inflammable gas, explosive gas, chemicals, seawater and vapor or do not expose the product to those. Otherwise, it may be a cause of malfunction.
19. Do not clean or paint the products by water or a solvent.

⚠ Caution

1. Operating pressure range in the catalog is the values during ejector operation. Secure the described value of the supplied air, taking a drop of the pressure into consideration. Insufficient pressure, which does not satisfy the spec, may cause abnormal noise, unstable performance and may negatively affect sensors, bringing troubles at last.
2. Effective cross-section area of the air supply side needs to be three times as large as effective cross-section area of the nozzle bore. When arranging piping or selecting PISCO products, secure required effective cross-section area. Insufficient supply pressure may be a cause to impair performance.
3. A Shorter distance of plumbing with a wider bore is preferable at vacuum system side. A long plumbing with a small bore may result in slow response time at the time of releasing work-piece as well as in failure to secure adequate suction flow rate.
4. Plumb a vacuum switch and an ejector with vacuum switch at the end of vacuum system as much as possible. A long distance between a vacuum switch and a vacuum system end may increase plumbing resistance which may lead to a high vacuum level at the sensor even when no suctioning and a malfunction of vacuum switch. Make sure to evaluate the products in an actual system.
5. Refer to “4. Instructions for Installing a fitting” and “5. Instructions for Removing a fitting” under “Common Safety Instructions for Fittings” , when installing or removing Fittings.
6. Refer to “Common Safety Instructions for Pressure Sensors” and “Detailed Safety Instructions” for the handling of digital vacuum switch sensor.
7. Refer to “Common Safety Instructions for Mechanical Vacuum Sensor” for the handling of mechanical vacuum switch.
8. The material of plastic filter cover for VG, VK, VJ, VZ and VX series is PCTG. Avoid the adherence of Chemicals below to the products, and do not use them under those chemical environments.

● Table Chemical Name

Chemical Name
Thinner
Carbon tetrachloride
Chloroform
Acetate
Aniline
Cyclohexane
Trichloroethylene
Sulfuric acid
Lactic acid
Water soluble cutting oil (alkaline)

* There are more chemicals which should be avoided. Contact us for the use under chemical circumstance.

9. The material of plastic filter cover for VQ and VFU series is PA. Avoid the adherence of chemicals below to the products, and do not use them under those chemical environments.

● Table Chemical Name

Chemical Name
Methanol
Ethanol
Nitric acid
Sulfuric acid
Hydrochloric acid
Lactic acid
Acetone
Chloroform
Aniline
Trichloroethylene
Hydrogen peroxide

* There are more chemicals which should be avoided. Contact us for the use under chemical circumstance.

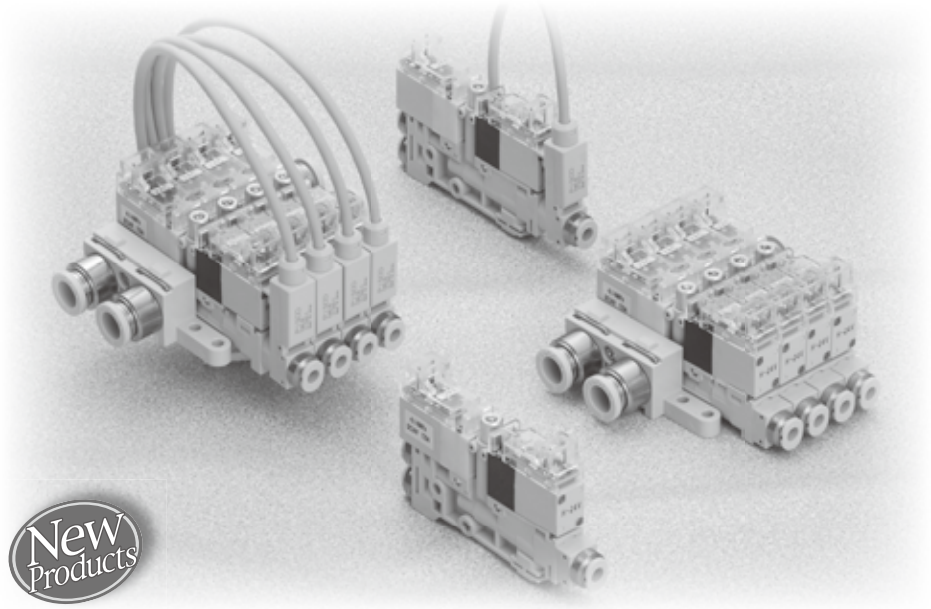

External Vacuum Controller realizing Stable and High-speed Response

External Vacuum Controller VNP Series

- *Suitable for semiconductor industry such as IC chip loader or IC handler.*

- *Suitable for the application requiring a limited space.*

Compact and lightweight External Vacuum Controller. The body height is lowered in particular.

- Stand-alone type

- Manifold type

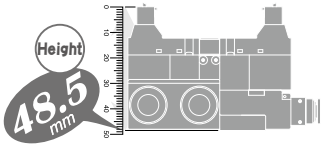

Characteristics

● *Wide variety of combinations enables to meet various applications. Complex Vacuum Generator VN Series is also available. (P.282).*

● *High-speed response time. (ON / OFF = 5msec or less)*

Direct operated solenoid valve is used for the main valve.

●Conventional Vacuum Controllers

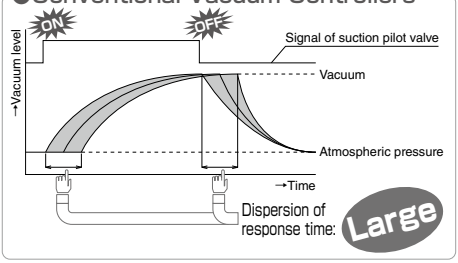

●External Vacuum Controller VNP

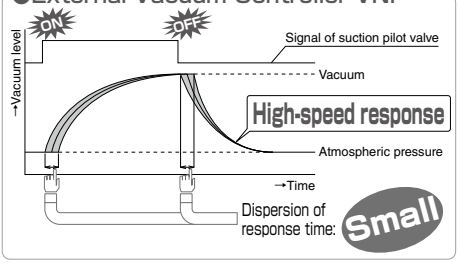

● *Four types of analog output type sensor are prepared.*

Analog output type vacuum pressure sensor for negative pressure, Separate LED indicator + Analog output type vacuum pressure sensor for negative pressure, Analog output type sensor for compound pressure, Separate LED indicator + Analog output type sensor for compound pressure

Analog output type sensor		Separate LED indicator + Analog output type sensor	
Negative pressure	Compound pressure	Negative pressure	Compound pressure
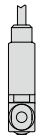		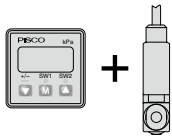	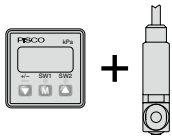

● *External vacuum filter (option) is prepared.*

Inconvenience from filter replacement due to the downsizing of this vacuum generator is resolved.

※ Vacuum Generator VN series is not equipped with vacuum filter. Please make sure to order PISCO vacuum filter (VFU or VFJ on page 758) separately for long-term use.

Model Designation of Stand-Alone Type (Example)

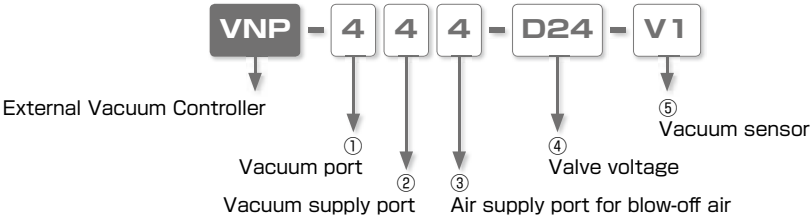

① Vacuum port (Applicable tube size)

Code	3	4	3L	4L
Tube dia.(mm)	ø3 (Straight push-in fitting)	ø4 (Straight push-in fitting)	ø3 (Elbow push-in fitting)	ø4 (Elbow push-in fitting)

② Vacuum supply port (Applicable tube size)

Code	3	4
Tube dia.(mm)	ø3 (Straight push-in fitting)	ø4 (Straight push-in fitting)

③ Air supply port for blow-off air (Applicable tube size)

Code	3	4
Tube dia.(mm)	ø3 (Straight push-in fitting)	ø4 (Straight push-in fitting)

④ Valve voltage

Code	D24
Voltage	24VDC

⑤ Vacuum sensor

Code	No code	
Sensor	Without vacuum sensor	
Code	V1	V2
Sensor	Analog output type vacuum sensor for negative pressure	Separate LED indicator + Analog output type vacuum sensor for negative pressure
Code	R1	R2
Sensor	Analog output type sensor for compound pressure	Separate LED indicator + Analog output type sensor for compound pressure

Model code of Unit Bracket (Option)

VNB

※. Including 2 hexagonal socket head screw (M3×12).

Model code of Silencer Element (Maintenance Parts)

VN012B32

Model Designation of Manifold Type (Example)

VNP - 4 4 4 - D24 - V1 - M 08

- VNP: External Vacuum Controller
- ① Vacuum port (Applicable tube size)
- ② Vacuum supply port (Applicable tube size)
- ③ Air supply port for blow-off air (Applicable tube size)
- ④ Valve voltage
- ⑤ Vacuum sensor
- ⑥ No. of stations

① Vacuum port (Applicable tube size)

Code	3	4	3L	4L	K
Tube dia.(mm)	ø3 (Straight push-in fitting)	ø4 (Straight push-in fitting)	ø8 (Elbow push-in fitting)	ø10 (Elbow push-in fitting)	When different vacuum ports are mixed on a manifold (Fill in the details on Specification Order Form)

② Vacuum supply port (Applicable tube size)

Code			Tube dia.(mm) & Type
Both sides	R-side only	L-side only	
4	4R	4H	ø4 (Straight push-in fitting)
6	6R	6H	ø6 (Straight push-in fitting)
8	8R	8H	ø8 (Straight push-in fitting)
4L	4LR	4LH	ø4 (Elbow push-in fitting)
6L	6LR	6LH	ø6 (Elbow push-in fitting)
8L	8LR	8LH	ø8 (Elbow push-in fitting)

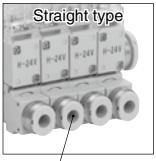

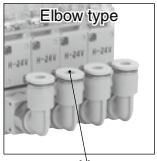

③ Air supply port for blow-off air (Applicable tube size)

Code			Tube dia.(mm) & Type
Both sides	R-side only	L-side only	
4	4R	4H	ø4 (Straight push-in fitting)
6	6R	6H	ø6 (Straight push-in fitting)
8	8R	8H	ø8 (Straight push-in fitting)
4L	4LR	4LH	ø4 (Elbow push-in fitting)
6L	6LR	6LH	ø6 (Elbow push-in fitting)
8L	8LR	8LH	ø8 (Elbow push-in fitting)

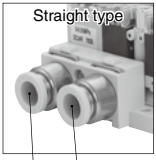

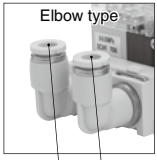

④ Valve voltage

Code	D24
Voltage	24VDC

⑤ Vacuum sensor

Code	No code	
Sensor	Without vacuum sensor	
Code	V1	V2
Sensor	Analog output type vacuum sensor for negative pressure	Separate LED indicator + Analog output type vacuum sensor for negative pressure
Code	R1	R2
Sensor	Analog output type compound pressure sensor	Separate LED indicator + Analog output type compound pressure sensor
Code	K	
Sensor	When different sensors are mixed on a manifold (Fill in the details on Specification Order Form)	

⑥ No. of stations

Code	02	03	04	05	06	07	08	09	10
No. of stations	2	3	4	5	6	7	8	9	10

Specification Order Form (example)

External vacuum controller type			Vacuum port ①	Vacuum supply port (PV) ②	Air supply port for blow-off air (PS) ③		Valve voltage ④	Vacuum sensor ⑤		No. of stations ⑥
VNP		–	K	8	8	–	**D24**	K	–	M04
L	St. 1	–	3L			–				
	St. 2	–	3L			–				
	St. 3	–	4			–		V1		
⬆ St. no. ⬇	St. 4	–	4			–		V1		
	St. 5	–				–				
	St. 6	–				–				
	St. 7	–				–				
	St. 8	–				–				
	St. 9	–				–				
R	St. 10	–				–				

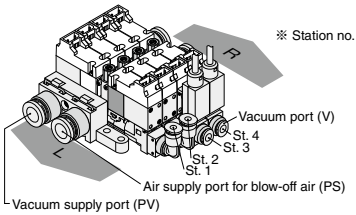

※ Station no. is arranged St.1, St.2 ··· St.10 from L side.

Vacuum Controller VNP Series Specification Order Form

To: NIHON PISCO CO., Ltd.

Name:

Order No.:

Date:

Request EX-W PISCO Date: Quantity:

External vacuum controller type			Vacuum port ①	Vacuum supply port (PV) ②	Air supply port for blow-off air (PS) ③		Valve voltage ④	Vacuum sensor ⑤		No. of stations ⑥
VNP		–				–	D24		–	
L	St. 1	–				–				
	St. 2	–				–				
⬆	St. 3	–				–				
	St. 4	–				–				
St. no.	St. 5	–				–				
	St. 6	–				–				
	St. 7	–				–				
⬇	St. 8	–				–				
	St. 9	–				–				
R	St. 10	–				–				

※ 1. Refer to the previous page to fill in the form.
※ 2. Copy this page and use.
※ 3. Use this specification order form when ordering different specifications of mounting units.

Construction of Stand-alone type, With vacuum sensor

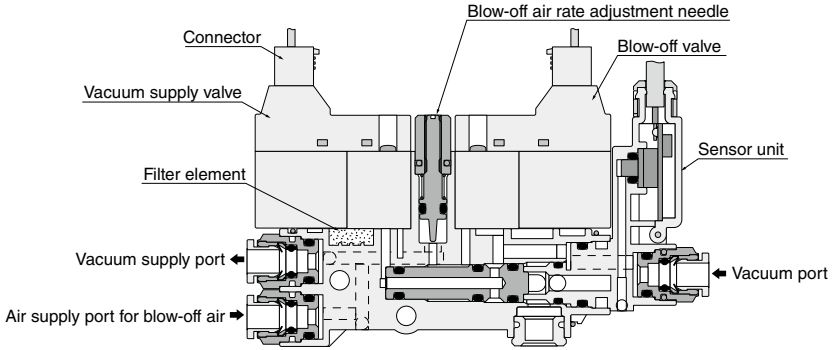

Construction of Manifold type, Without vacuum sensor

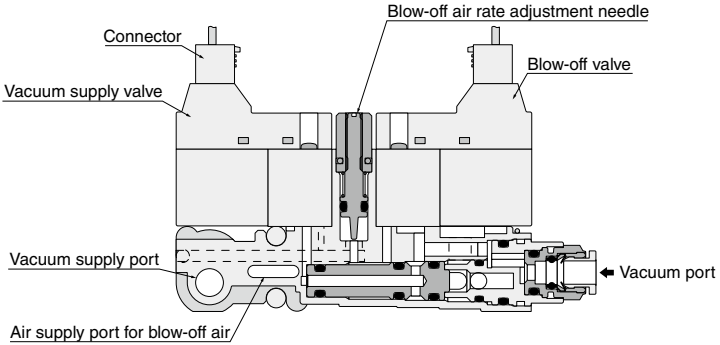

Mechanism of VNP

① When suction valve is off (At vacuum generation suspended)

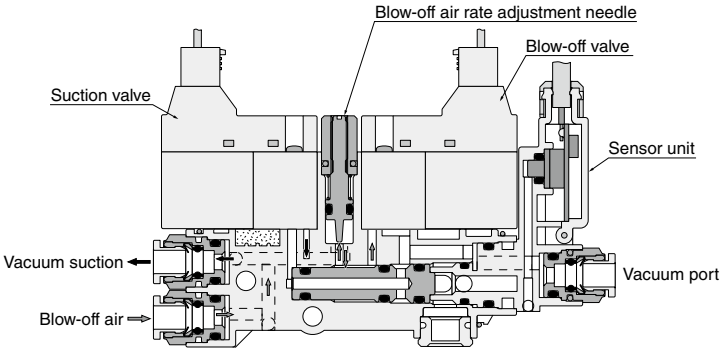

② When suction valve is on (At vacuum suction)

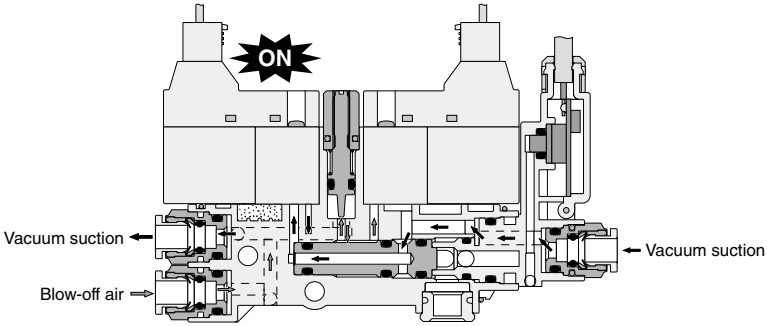

③ When blow-off valve is on (At blow-off air supply)

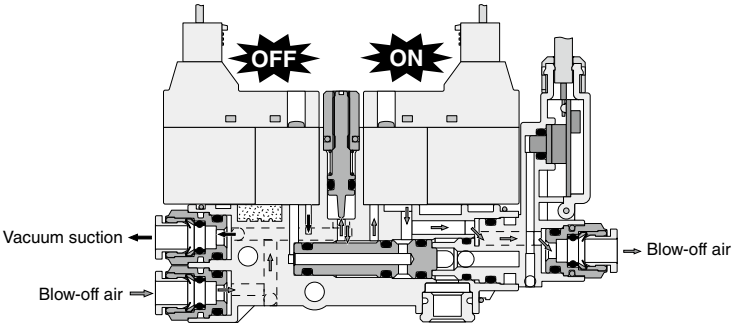

Specification

Fluid medium	Air
Operating pressure range	0 ~ 0.55MPa
Operating temp. range	5 ~ 50°C (No freezing)
Operating humidity range	35 ~ 85%RH (No dew condensation)
Protective structure	IEC standard IP40 equiv.
Vibration and impact resistance	Less than 50m/s²／Less than 150m/s²
Operating vacuum range	0 ~ -100kPa

Solenoid Valve

Item	Suction valve	Blow-off valve
Operating system	Direct operation	
Valve construction	Elastic seal, Poppet valve	
Rated voltage	24VDC	
Allowable voltage range	±10%	
Surge protection circuit	Surge absorber	
Power consumption	Startup: 2.2W Retention: 0.6W (Power saving circuit)	
Operation indicator LED	Green RED	
Operating pressure range	-100 ~ 0kPa	0 ~ 0.55MPa
Valve type	Normally closed	
Response time (※)	Vacuum suction (OFF → ON) / Vacuum stop (ON → OFF): 5 msec or less for each	
Wiring method	Connector (Cable length: 500mm)	
	Red lead wire: +24VDC, Black lead wire: -0V	

(※) Response time is the time length until pressure change at vacuum port is detected under rated supply pressure and rated voltage. Vacuum arrival time and blow-off time at the piping end (work-piece) vary according to ejector characteristics, volume (tube length), blow-off air rate and others.

Blow-Off Function

Blow-off air rate	0 ~ 20ℓ/min[ANR] (When supply pressure is at 0.5MPa)

※. Air rate is adjustable with the blow-off air rate adjustment needle.

Vacuum Flow Rate

Vacuum Flow Rate	8ℓ/min[ANR] (When supply pressure is at -80kPa)

Vacuum Sensor

Item		Negative pressure (-V1)	Compound pressure (-R1)
Rated voltage		10.8 ~ 30VDC (Ripple included)	
Current consumption		Less than 20mA (24VDC at no-load)	
Pressure detection		Proliferated semiconductor pressure sensor, gauge pressure	
Operating pressure range		-100 ~ 0kPa	-100 ~ 300kPa
Proof pressure		200kPa	600kPa
Storage temperature rang		-20 ~ 70°C (Atmospheric pressure / Humidity: 65% RH or less)	
Operating temp. range		-10 ~ 60°C (No freezing)	
Operating humidity range		35 ~ 85%RH (No dew condensation)	
Protective structure		IEC standard IP40 equiv.	
Analog output	Output voltage	1 ~ 5V	
	Zero-point voltage	1±0.1V (=Atmospheric pressure)	1±0.1V (At -100kPa)
	Max. pressure voltage	5±0.1V (At -100kPa)	5±0.1V (At 300kPa)
	Linearity	±0.5% F.S. or less (at Ta=25°C)	
	Temperature characteristics	±2% F.S. or less (0 ~ 50°C, Ta=25°C)	
	Output current	Output current: 1mA max. (load resistance 50kΩmax.)	

Circuit diagram

Solenoid valve

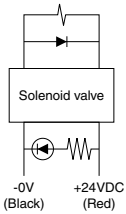

Vacuum sensor

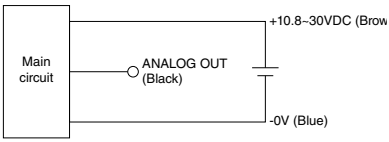

Characteristics

Flow characteristics Chart

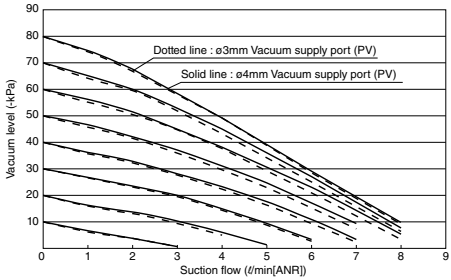

Flow characteristics of blow-off air

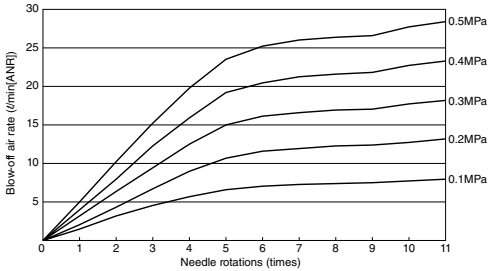

How to insert and disconnect

1. How to insert and disconnect tubes

① Tube insertion

Insert a tube into Push-In Fitting of External Vacuum Controller VNP up to the tube end. Lock-claws bites the tube to fix it automatically and the elastic sleeve seals around the tube.

Refer to "2. Instructions for Tube Insertion" under "Common Safety Instructions for Fittings" .

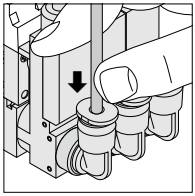

② Tube disconnection

The tube is disconnected by pushing release-ring to release Lock-claws.

Make sure to stop air supply before the tube disconnection.

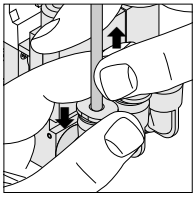

2. How to fix Stand-alone/Manifold type

In order to fix the vacuum generator, use the fixing holes on the body to tighten with M3 thread with tightening torque 0.3-0.35Nm. Tightening by the torque out of the recommended range may result in falling of the product or damaging the products. .

Refer to the outer dimensional drawings of the mounting hole pitch.

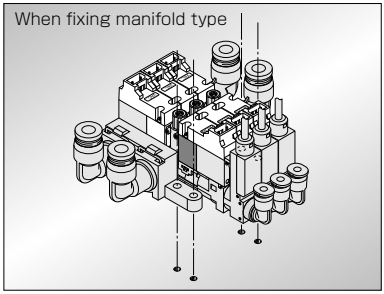

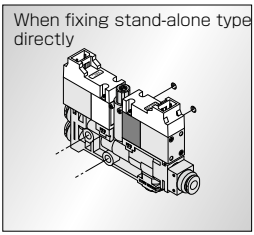

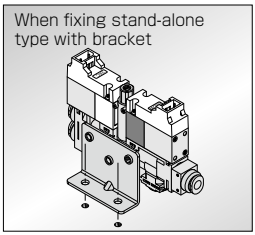

Weight List

Model code	Unit combinations	Weight (g)
VNP-□□□-D24-□	Stand-alone with vacuum sensor	56
VNP-□□□-D24	Stand-alone without vacuum sensor	52.5
VNP-M	Manifold-base alone	171

■ For manifold type, weight of mounting unit increases by 46.5g/ mounting unit with a sensor, and 43g/mounting unit without a sensor.

Example) 4 stations with vacuum sensor

171+(4x46.5)=357g → Manifold weight (171g) + weight of 4 mounting units with vacuum sensor (186g)

Applicable Tube and Related Products

Polyurethane Tube (1. Piping products catalog P.596)

■ Polyurethane Tube is for the general pneumatic piping and suitable for a compact piping.

Nylon Tube (1. Piping products catalog P.608)

■ Nylon Tube is for the general pneumatic piping and suitable for a high-pressure fluid up to 1.5MPa (NB tube: 1.0MPa).

Vacuum Tube (1. Piping products catalog P.612)

■ Vacuum Tube is a ultra-soft tube and suitable for piping of vacuum generators or actuators.

Vacuum Pads

Standard Size List

Without vacuum sensor

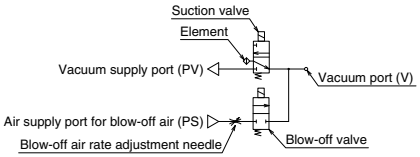

Type	Page	Vacuum port	Vacuum supply port 3mm	Vacuum supply port 4mm	Air supply port for blow-off air
VNP	407	3mm	●	●	3mm
		4mm	●	●	4mm

With vacuum sensor

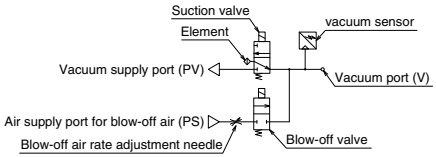

Type	Page	Vacuum port	Vacuum supply port 3mm	Vacuum supply port 4mm	Air supply port for blow-off air
VNP	407	3mm	●	●	3mm
		4mm	●	●	4mm

VNP Stand-alone type, Without vacuum sensor

Chart P.404

Model code : VNP-□□□-D24

Circuit diagram

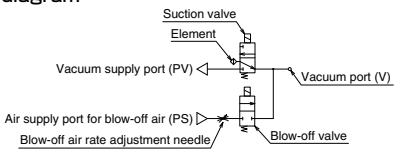

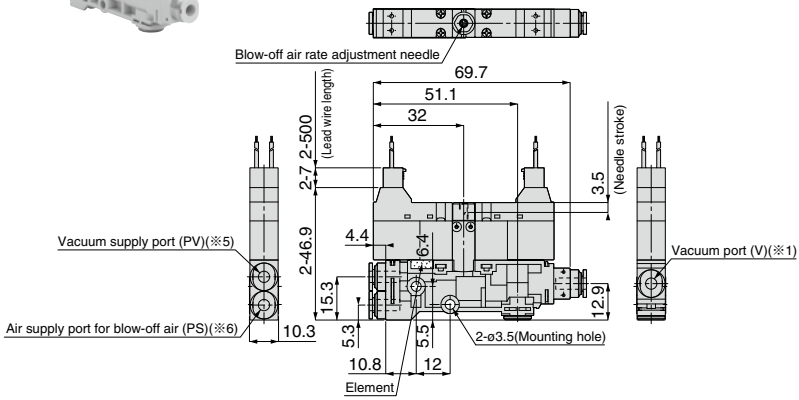

※ 1. Refer to table 1 on page 408 for the dimension of Vacuum port (V).
※ 2. Refer to table 2 on page 408 for the dimension of Vacuum supply port.(PV).
※ 3. Refer to table 2 on page 408 for the dimension of Vacuum supply port for blow-off air (PS).

VNP Stand-alone type with vacuum sensor

Chart P.404

Model code : VNP-□□□-D24-□1

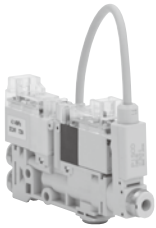

Circuit diagram

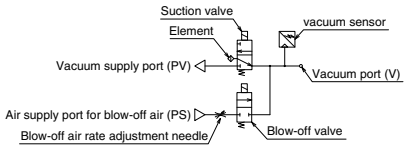

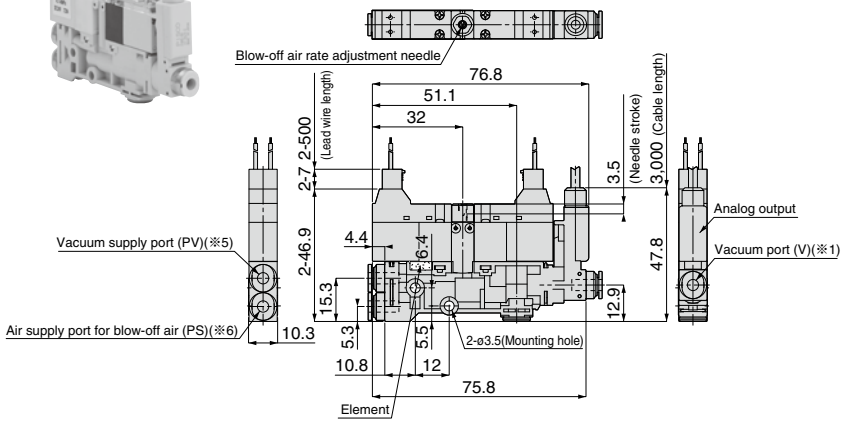

※ 1. Refer to table 1 on page 408 for the dimension of Vacuum port (V).
※ 2. Refer to table 2 on page 408 for the dimension of Vacuum supply port.(PV).
※ 3. Refer to table 2 on page 408 for the dimension of Vacuum supply port for blow-off air (PS).

Fitting Dimension of Stand-Alone type

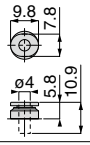	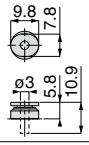	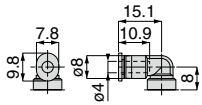	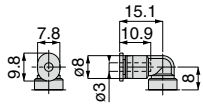
4(ø4 Straight type)	3(ø3 Straight type)	4L(ø4 Elbow type)	3L(ø3 Elbow type)

Table 1：Push-In Fitting type of Vacuum port

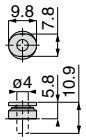	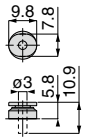
4(ø4 Straight type)	3(ø3 Straight type)

Table 2：Push-In Fitting type of Air supply port

VNB Bracket for Stand-Alone type (Option)

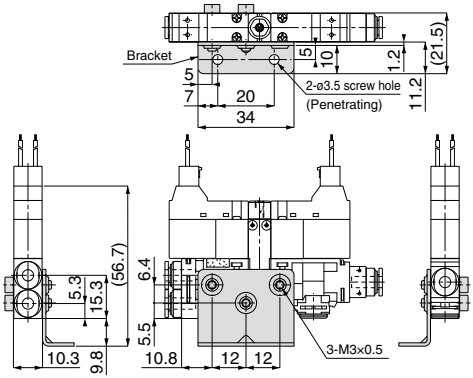

VNP Manifold type, Without vacuum sensor

Model code : VNP-□□□-D24-M□

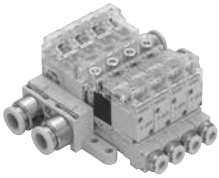

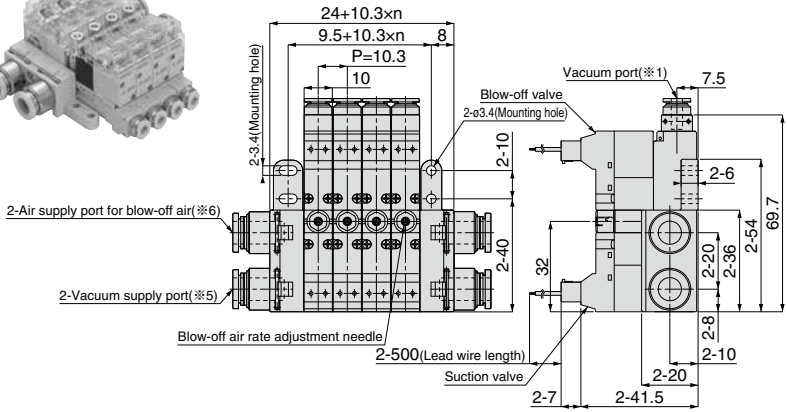

※ 1. Refer to table 1 on page 410 for the dimension of Vacuum port.
※ 2. Refer to table 2 on page 410 for the dimension of Vacuum supply port.
※ 3. Refer to table 2 on page 410 for the dimension of Vacuum supply port for blow-off air.

VNP Manifold type, With vacuum sensor

Model code : VNP-□□□-D24-□1-M□

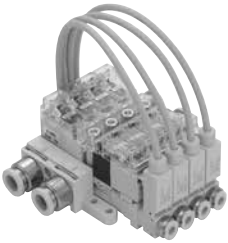

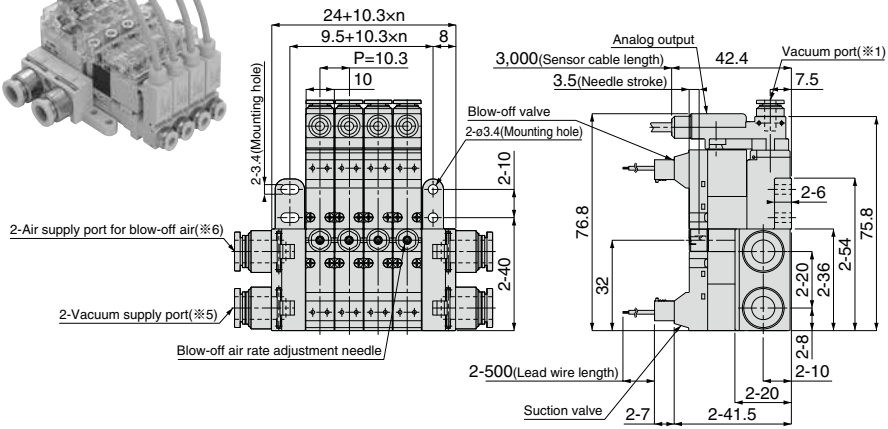

※ 1. Refer to table 1 on page 410 for the dimension of Vacuum port.
※ 2. Refer to table 2 on page 410 for the dimension of Vacuum supply port.
※ 3. Refer to table 2 on page 410 for the dimension of Vacuum supply port for blow-off air.

Fitting Dimension of Manifold type

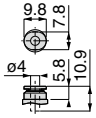	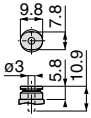	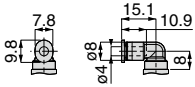	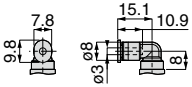
4(ø4 Straight type)	3(ø3 Straight type)	4L(ø4 Elbow type)	3L(ø3 Elbow type)
Table 1：Push-In Fitting of Vacuum port			

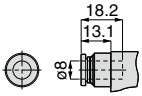	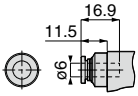	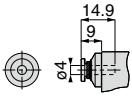	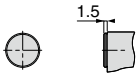
8(ø8 Straight type)	6(ø6 Straight type)	4(ø4 Straight type)	Plug(For one-side supply)
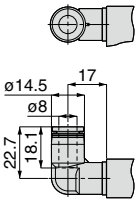	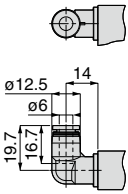	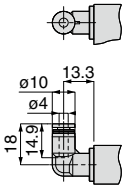	
8(ø8 Elbow type)	6(ø6 Elbow type)	4(ø4 Elbow type)	
Table 2：Push-In Fitting of Air supply port			

⚠ Detailed Safety Instructions

Before using PISCO products, be sure to read “Safety Instructions” and “Safety Instruction Manual” on page 35-39 and “Common Safety Instructions for Vacuum Series” on page 47-49.

Warning

【Products Handling】

1. Do not step onto or place objects on the devices. These may cause falling accident, fall of devices, injuries from falling and malfunctions from device breakage.
2. Do not wash or paint the devices with solvent or water. Solvent use may cause breakage of resin parts and malfunction by port clogs.

【Products maintenance】

1. Carry out maintenance and checks of equipment only after turning power off, shutting air off and making sure that the residual pressure in the piping has dropped to zero.
2. When installing wiring and piping, be sure to switch off the power and make sure there is no wrong wiring and wrong piping before applying power and air.
3. Tighten screws with recommended tightening torque. The recommended tightening torque for fixing device is specified on "How to fix Stand alone / Manifold type" on page 405. The recommended tightening torque is written on “ How to replace Filter Elements” on page 413. Improper tightening may cause air leakage, dropout or breakage of the products.

【Products application】

1. For the operation of the solenoid valve, make sure that the leakage current is less than 1mA. Leakage current larger than that may cause malfunction.
2. Avoid applying excessive vibration or shocks to the devises. (Check the specification on page 293.) It may damage devises and lead to malfunction of solenoid valve.
3. The coil in a pilot solenoid valve generates heat under the following ① to ③ conditions. The heat may cause dropping life cycle, malfunctions, getting burnt or damaging peripheral machines.
   Contact us when the power is applied to the vacuum generator under the following conditions:
   ① The power is continuously ON for over 2 hours.
   ② High-cycle operation.
   ③ Even when intermittent running of the generator is carried out, the total operation time per day is longer than non-operation time.
4. When the electricity is applied to valves continuously for a long time, the coils generate heat. It may cause dropping life cycle, malfunctions, getting burnt or damaging peripheral machines due to the heat.
5. Current limit circuit is adopted for the solenoid valve. It features the current drop when the coil is energized and retains current. Therefore, the use under the vibration or shock greater than the specification must be avoided. It may cause valve malfunction.

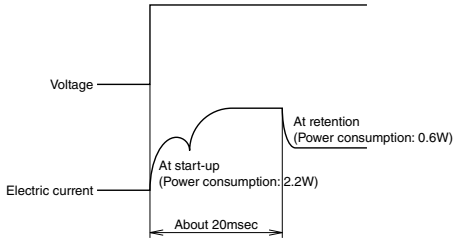

Electric current and voltage waveform at valve excitation

Caution

【Products Handling】

1. Do not give an excessive tensile strength and bending on a lead wire. Otherwise, breaking wire or damage on connector may be caused.
2. Compressed air contains many kinds of drains such as water, oxidized oil, tar and other foreign substances. Dehumidify the compressed air by using an after-cooler or a dryer and improve the air quality, since those drains seriously impair the performance of the vacuum generator.
3. Do not use lubricators.
4. Foreign substances such as rusts or dust in the pipes may cause malfunction. Place a filter finer than 5μm ahead of the air supply port. It is recommended to carry out pipe flushing before operation and on a proper regular basis.
5. Avoid using the vacuum generator under the condition of corrosive and / or inflammable gas. Also do not use these gasses as a fluid medium.
6. The product is not drip/dust proof. Do not use the vacuum generator in location where it may be exposed to water, oil drop or dust.
7. The lead wire of solenoid valve is polarized. Therefore, wrong polarity does not activate the solenoid valve.

【Products maintenance】

1. When replacing cartridge fittings for air supply (PS, PV) or vacuum (V) port, be sure to remove foreign substances from the seal and fix the fastening pin firmly in place.
2. The performance of silencer may deteriorate due to when much dust is stuck on the elements of External Vacuum Controller. Periodical cleaning and replacing of the elements are recommended.

【Products application】

1. In selecting the piping to the vacuum (V) port, secure piping bore and length for enough effective sectional area. Insufficient effective sectional area may cause performance drop in characteristics such as suction flow and vacuum release airflow.
2. In selecting the piping to the supply (PS,PV) port, select piping bore and length to secure enough effective sectional area. Insufficient effective sectional area may cause performance drop due to short supply of compressed air and vacuum flow.
3. This product is not equipped with a vacuum filter. Make sure to select and use PISCO vacuum filter. If the filter is not used, dust or other particles are accumulated inside the product and cause vacuum performance drop and solenoid valve malfunction such as air leakage. (Recommended filter: VFU series and VFJ series)
4. As for manifold types, allowable station numbers for the simultaneous operation depends on the condition of the air supply (supply port size, piping length, regulator processing flow rate and etc.) and/ or air consumption (vacuum characteristics) of ejector. If simultaneous operation of mounting units on a manifold is required, contact PISCO before the use.
5. Although the exhaust of the model with a manifold type is silencer vent by each individual unit, the exhaust air of operating unit or blow-off air flows into the vacuum port of non-operating unit. If such exhaust air causes the problem, please contact PISCO.

⚠ Safety Rules for Use

How to replace Filter Elements

■ Use a Phillips screwdriver and remove a suction valve in order to replace a filter element (Model code: VN012B32). Make sure to insert the pin in the proper position after the replacement. Pay attention not to lose seal rubbers of Suction valve before tightening the fixing threads with the tightening torque 0.15-0.2Nm.

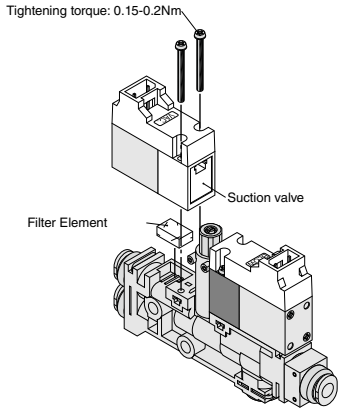

How to replace Cartridge Fittings in Vacuum Port

■ Stand-Alone Type

Pull out the spring pins (2 pieces) inserted from the side of vacuum port block with or without sensor unit with the jig like ø1mm pin and replace the cartridge fitting.

※ When attaching a new cartridge fitting, make sure to remove dusts or fluffs stuck on O-ring. O-ring and inside of the body shall not be damaged, since it may cause a performance drop.

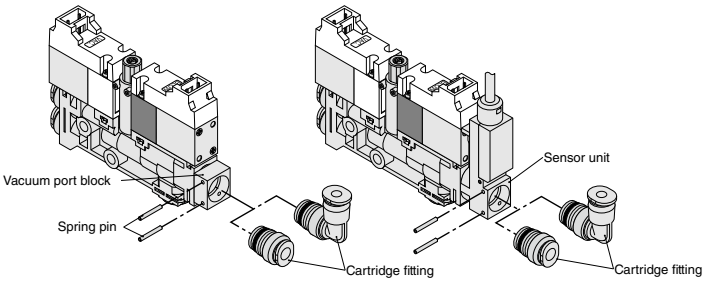

■ Manifold Type

Using a suitable Philips screwdriver to remove the vacuum blow-off valve. Pull out the fixing pin using a flat-blade screwdriver and remove the vacuum port block with or without sensor unit. Pull out the spring pins (2 pieces) inserted from the side of the vacuum port block with the jig like ø1mm pin and replace the cartridge fittings. After checking the packing for the vacuum supply valve is not missing, securely tighten the two fixing screws with a tightening torque of 0.15-0.2N.m.

※ When attaching a new cartridge fitting, make sure to remove dusts or fluffs stuck on O-ring. O-ring and inside of the body shall not be damaged, since it may cause a performance drop.

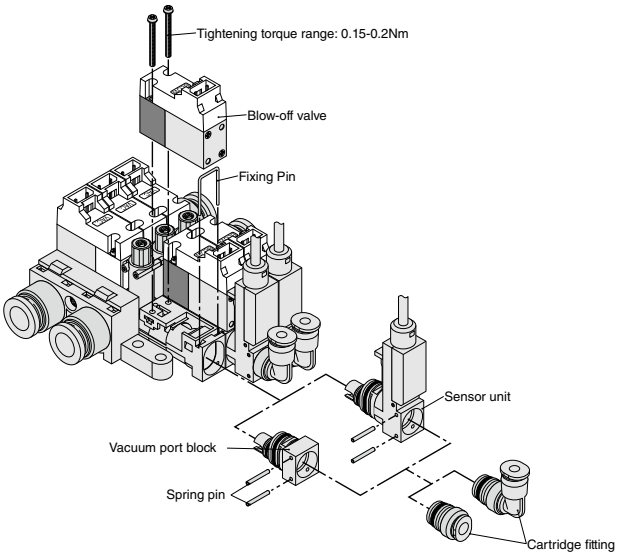

How to replace Cartridge Fittings of Supply Port

Stand-Alone Type

Using a suitable Philips screwdriver to remove suction valve. Pull out a fixing pin on suction air supply port and blow-off air supply port with a flathead screwdriver. After checking the packing for vacuum supply valve is not missing, securely tighten the two fixing screws with tightening torque of 0.15-0.2N·m.

※ When attaching a new cartridge fitting, make sure to remove dusts or fluffs stuck on O-ring. O-ring and inside of the body shall not be damaged, since it may cause a performance drop.

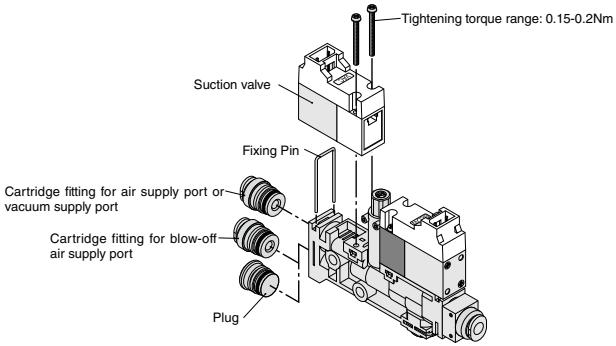

Manifold Type

Pull out the fixing pin with a flathead screwdriver and replace cartridge fittings.

※ When attaching a new cartridge fitting, make sure to remove dusts or fluffs stuck on O-ring. O-ring and inside of the body shall not be damaged, since it may cause a performance drop.

※ Be careful of the direction of fixing pin. If the fixing pin is inserted with a wrong direction, the pin may drop off due to vibration.

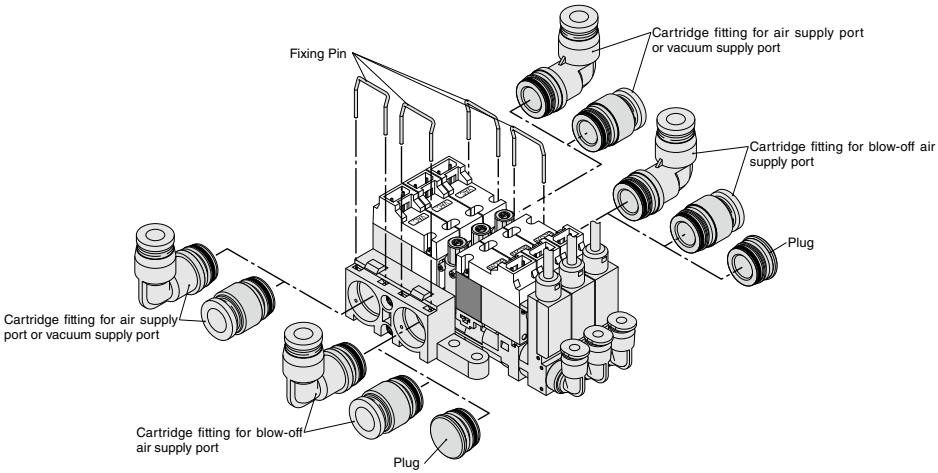

⚠ SAFETY Instructions

This safety instructions aim to prevent personal injury and damage to properties by requiring proper use of PISCO products.

Be certain to follow ISO 4414 and JIS B 8370

ISO 4414 : Pneumatic fluid power…Recomendations for the application of equipment to transmission and control systems.

JIS B 8370 : General rules and safety requirements for systems and their components.

This safety instructions is classified into "Danger", "Warning" and "Caution" depending on the degree of danger or damages caused by improper use of PISCO products.

⚠ Danger	Hazardous conditions. It can cause death or serious personal injury.
⚠ Warning	Hazardous conditions depending on usages. Improper use of PISCO products can cause death or serious personal injury.
⚠ Caution	Hazardous conditions depending on usages. Improper use of PISCO products can cause personal injury or damages to properties.

⚠ Warning

1. Selection of pneumatic products
   ① A user who is a pneumatic system designer or has sufficient experience and technical expertise should select PISCO products.
   ② Due to wide variety of operating conditions and applications for PISCO products, carry out the analysis and evaluation on PISCO products. The pneumatic system designer is solely responsible for assuring that the user's requirements are met and that the application presents no health or safety hazards. All designers are required to fully understand the specifications of PISCO products and constitute all systems based on the latest catalog or information, considering any malfunctions.

2. Handle the pneumatic equipment with enough knowledge and experience
   ① Improper use of compressed air is dangerous. Assembly, operation and maintenance of machines using pneumatic equipment should be conducted by a person with enough knowledge and experience.

3. Do not operate machine / equipment or remove pneumatic equipment until safety is confirmed.
   ① Make sure that preventive measures against falling work-pieces or sudden movements of machine are completed before inspection or maintenance of these machine.
   ② Make sure the above preventive measures are completed. A compressed air supply and the power supply to the machine must be off, and also the compressed air in the systems must be exhausted.
   ③ Restart the machines with care after ensuring to take all preventive measures against sudden movements.

※. This safety instructions are subject to change without notice.

Disclaimer

1. PISCO does not take any responsibility for any incidental or indirect loss, such as production line stop, interruption of business, loss of benefits, personal injury, etc., caused by any failure on use or application of PISCO products.

2. PISCO does not take any responsibility for any loss caused by natural disasters, fires not related to PISCO products, acts by third parties, and intentional or accidental damages of PISCO products due to incorrect usage.

3. PISCO does not take any responsibility for any loss caused by improper usage of PISCO products such as exceeding the specification limit or not following the usage the published instructions and catalog allow.

4. PISCO does not take any responsibility for any loss caused by remodeling of PISCO products, or by combinational use with non-PISCO products and other software systems.

5. The damages caused by the defect of Pisco products shall be covered but limited to the full amount of the PISCO products paid by the customer.

⚠ SAFETY INSTRUCTION MANUAL

PISCO products are designed and manufactured for use in general industrial machines. Be sure to read and follow the instructions below.

⚠ Danger

1. Do not use PISCO products for the following applications.
   ① Equipment used for maintaining / handling human life and body.
   ② Equipment used for moving / transporting human.
   ③ Equipment specifically used for safety purposes.

⚠ Warning

1. Do not use PISCO products under the following conditions.
   ① Beyond the specifications or conditions stated in the catalog, or the instructions.
   ② Under the direct sunlight or outdoors.
   ③ Excessive vibrations and impacts.
   ④ Exposure / adhere to corrosive gas, inflammable gas, chemicals, seawater, water and vapor. *
   ＊Some products can be used under the condition above(④), refer to the details of specification and condition of each product.
2. Do not disassemble or modify PISCO products, which affect the performance, function, and basic structure of the product.
3. Turn off the power supply, stop the air supply to PISCO products, and make sure there is no residual air pressure in the pipes before maintenance and inspection.
4. Do not touch the release-ring of push-in fitting when there is a working pressure. The lock may be released by the physical contact, and tube may fly out or slip out.
5. Frequent switchover of compressed air may generate heat, and there is a risk of causing burn injury.
6. Avoid any load on PISCO products, such as a tensile strength, twisting and bending. Otherwise, there is a risk of causing damage to the products.
7. As for applications where threads or tubes swing / rotate, use Rotary Joints, High Rotary Joints or Multi-Circuit Rotary Block only. The other PISCO products can be damaged in these applications.
8. Use only Die Temperature Control Fitting Series, Tube Fitting Stainless SUS316 Series, Tube Fitting Stainless SUS316 Compression Fitting Series or Tube Fitting Brass Series under the condition of over 60℃ (140° F) water or thermal oil. Other PISCO products can be damaged by heat and hydrolysis under the condition above.
9. As for the condition required to dissipate static electricity or provide an antistatic performance, use EG series fitting and antistatic products only, and do not use other PISCO products. There is a risk that static electricity can cause system defects or failures.
10. Use only Fittings with a characteristic of spatter-proof such as Anti-spatter or Brass series in a place where flame and weld spatter is produced. There is a risk of causing fire by sparks.
11. Turn off the power supply to PISCO products, and make sure there is no residual air pressure in the pipes and equipment before maintenance. Follow the instructions below in order to ensure safety.
    ① Make sure the safety of all systems related to PISCO products before maintenance.
    ② Restart of operation after maintenance shall be proceeded with care after ensuring safety of the system by preventive measures against unexpected movements of machines and devices where pneumatic equipment is used.
    ③ Keep enough space for maintenance when designing a circuit.
12. Take safety measures such as providing a protection cover if there is a risk of causing damages or fires on machine / facilities by a fluid leakage.

⚠ Caution

1. Remove dusts or drain before piping. They may get into the peripheral machine / facilities and cause malfunction.
2. When inserting an ultra-soft tube into push-in fitting, make sure to place an Insert Ring into the tube edge. There is a risk of causing the escape of tube and a fluid leakage without using an Insert Ring.
3. The product incorporating NBR as seal rubber material has a risk of malfunction caused by ozone crack. Ozone exists in high concentrations in static elimination air, clean-room, and near the high-voltage motors, etc. As a countermeasure, material change from NBR to HNBR or FKM is necessary. Consult with PISCO for more information.
4. Special option "Oil-free" products may cause a very small amount of a fluid leakage. When a fluid medium is liquid or the products are required to be used in harsh environments, contact us for further information.
5. In case of using non-PISCO brand tubes, make sure the tolerance of the outer tube diameter is within the limits of Table 1.

●Table 1. Tube O.D. Tolerance

mm size	Nylon tube	Polyurethane tube
ø1.8mm	—	±0.05mm
ø3mm	—	±0.15mm
ø4mm	±0.1mm	±0.15mm
ø6mm	±0.1mm	±0.15mm
ø8mm	±0.1mm	±0.15mm
ø10mm	±0.1mm	±0.15mm
ø12mm	±0.1mm	±0.15mm
ø16mm	±0.1mm	±0.15mm

inch size	Nylon tube	Polyurethane tube
ø1/8	±0.1mm	±0.15mm
ø5/32	±0.1mm	±0.15mm
ø3/16	±0.1mm	±0.15mm
ø1/4	±0.1mm	±0.15mm
ø5/16	±0.1mm	±0.15mm
ø3/8	±0.1mm	±0.15mm
ø1/2	±0.1mm	±0.15mm
ø5/8	±0.1mm	±0.15mm

6. Instructions for Tube Insertion
   ① Make sure that the cut end surface of the tube is at right angle without a scratch on the surface and deformations.
   ② When inserting a tube, the tube needs to be inserted fully into the push-in fitting until the tubing edge touches the tube end of the fitting as shown in the figure below. Otherwise, there is a risk of leakage.

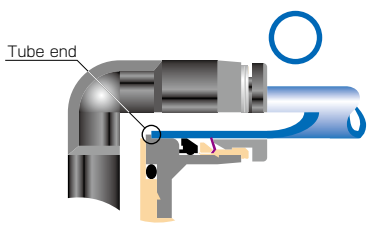

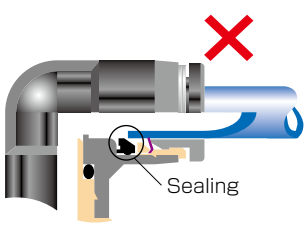

Tube is not fully inserted up to tube end.

   ③ After inserting the tube, make sure it is inserted properly and not to be disconnected by pulling it moderately.
   ※. When inserting tubes, Lock-claws may be hardly visible in the hole, observed from the front face of the release-ring. But it does not mean the tube will surely escape. Major causes of the tube escape are the followings;
   ①Shear drop of the lock-claws edge
   ②The problem of tube diameter (usually small)
   Therefore, follow the above instructions from ① to ③, even lock-claws is hardly visible.

7. Instructions for Tube Disconnection
   ① Make sure there is no air pressure inside of the tube, before disconnecting it.
   ② Push the release-ring of the push-in fitting evenly and deeply enough to pull out the tube toward oneself. By insufficient pushing of the release-ring, the tube may not be pulled out or damaged by scratch, and tube shavings may remain inside of the fitting, which may cause the leakage later.
8. Instructions for Installing a fitting
   ① When installing a fitting, use proper tools to tighten a hexagonal-column or an inner hexagonal socket. When inserting a hex key into the inner hexagonal socket of the fitting, be careful so that the tool does not touch lock-claws. The deformation of lock-claws may result in a poor performance of systems or an escape of the tube.
   ② Refer to Table 2 which shows the recommended tightening torque. Do not exceed these limits to tighten a thread. Excessive tightening may break the thread part or deform the gasket and cause a fluid leakage. Tightening thread with tightening torque lower than these limits may cause a loosened thread or a fluid leakage.
   ③ Adjust the tube direction while tightening thread within these limits, since some PISCO products are not rotatable after the installation.

●Table 2: Recommended tightening torque / Sealock color / Gasket materials

Thread type	Thread size	Tightening torque	Sealock color	Gasket materials
Metric thread	M3 × 0.5	0.7N·m	—	SUS304 NBR
	M5 × 0.8	1.0 ~ 1.5N·m		
	M6 × 1	2 ~ 2.7N·m		
	M3 × 0.5	0.5 ~ 0.6N·m		POM
	M5 × 0.8	1 ~ 1.5N·m		
	M6 × 0.75	0.8 ~ 1N·m		
	M8 × 0.75	1 ~ 2N·m		
Taper pipe thread	R1/8	7 ~ 9N·m	White	—
	R1/4	12 ~ 14N·m		
	R3/8	22 ~ 24N·m		
	R1/2	28 ~ 30N·m		
Unified thread	No.10-32UNF	1.0 ~ 1.5N·m	—	SUS304、NBR
National pipe thread taper	1/16-27NPT	7 ~ 9N·m	White	—
	1/8-27NPT	7 ~ 9N·m		
	1/4-18NPT	12 ~ 14N·m		
	3/8-18NPT	22 ~ 24N·m		
	1/2-14NPT	28 ~ 30N·m		

※ These values may differ for some products. Refer to each specification as well.

9. Instructions for removing a fitting
   ① When removing a fitting, use proper tools to loosen a hexagonal-column or an inner hex bolt.
   ② Remove the sealant stuck on the mating equipment. The remained sealant may get into the peripheral equipment and cause malfunctions.
10. Arrange piping avoiding any load on fittings and tubes such as twist, tensile, moment load, shaking and physical impact. These may cause damages to fittings, tube deformations, bursting and the escape of tubes.

⚠ Common Safety Instructions for Vacuum Series

Before selecting or using PISCO products, read the following instructions. Read the detailed instructions for individual series.

⚠ Warning

1. If there is a risk of dropping work-pieces during vacuum suction, take a safety measure against the falling of them.
2. Avoid supplying more than 0.1MPa pressure constantly in a vacuum circuit. Since vacuum generators are not explosive-proof, there is a risk of damaging the products.
3. Pay attention to drop of vacuum pressure caused by problems of the supplied air or the power supply. Decrease of suction force may lead to a danger of falling work-piece so that safety measure against the falling of them is necessary.
4. When more than 2 vacuum pads are plumbed on a single ejector and one of them has a suction problem such as vacuum leak, there is a risk of releasing work-pieces from the other pad due to the drop of the vacuum pressure.
5. Do not use in the way by which exhaust port is blocked or exhaust resistance is increased. Otherwise, there is a risk of no vacuum generation or a drop of the vacuum pressure.
6. Do not use the product in the circumstance of corrosive gas, inflammable gas, explosive gas, chemicals, seawater and vapor or do not expose the product to those. Never allow the product to suck those things.
7. Provide a protective cover on the products when it is exposed to sunlight.
8. Carry out clogging check for silencer element in an ejector and a vacuum filter periodically. Clogged element will be a cause to impair the performance or a cause of troubles.
9. Before replacing the element, thoroughly read and understand the method of filter replacement in the catalog.
10. Make sure the correct port of the vacuum generator by this catalog or marking on the products when plumbing. Wrong plumbing can be a risk to damage the product.
11. Supply clean air without sludge or dusts to an ejector. Do not lubricate by a lubricator. There is a risk of malfunction or performance impairing by impurities and oil contained in the compressed air.
12. Do not apply extreme tension, twist or bending forces on a lead wire. Otherwise, it may cause a wire breaking.
13. Locknut needs to be tightened firmly by hand. Do not use any tool to tighten. In case of using tools to tighten the locknut, it may damage the locknut or the product. Inadequate tightening may loosen the locknut and the initial setting can be changed.
14. Do not force the product to rotate or swing even its resin body is rotatable. It may cause damage to the product and a fluid leakage.
15. Do not supply an air pressure or a dry air to the products over the necessary amount. There is a risk of deteriorating rubber materials and malfunction due to oil.
16. Keep the product away from water, oil drops or dusts. These may cause malfunction. Take a proper measure to protect the product before the operation.

17. Do not use the product in the environment of inflammable or explosive gas / fluid. It can cause a fire or an explosion hazard.
18. Do not use the product in the circumstance of corrosive gas, inflammable gas, explosive gas, chemicals, seawater and vapor or do not expose the product to those. Otherwise, it may be a cause of malfunction.
19. Do not clean or paint the products by water or a solvent.

⚠ Caution

1. Operating pressure range in the catalog is the values during ejector operation. Secure the described value of the supplied air, taking a drop of the pressure into consideration. Insufficient pressure, which does not satisfy the spec, may cause abnormal noise, unstable performance and may negatively affect sensors, bringing troubles at last.
2. Effective cross-section area of the air supply side needs to be three times as large as effective cross-section area of the nozzle bore. When arranging piping or selecting PISCO products, secure required effective cross-section area. Insufficient supply pressure may be a cause to impair performance.
3. A Shorter distance of plumbing with a wider bore is preferable at vacuum system side. A long plumbing with a small bore may result in slow response time at the time of releasing work-piece as well as in failure to secure adequate suction flow rate.
4. Plumb a vacuum switch and an ejector with vacuum switch at the end of vacuum system as much as possible. A long distance between a vacuum switch and a vacuum system end may increase plumbing resistance which may lead to a high vacuum level at the sensor even when no suctioning and a malfunction of vacuum switch. Make sure to evaluate the products in an actual system.
5. Refer to “4. Instructions for Installing a fitting” and “5. Instructions for Removing a fitting” under “Common Safety Instructions for Fittings” , when installing or removing Fittings.
6. Refer to “Common Safety Instructions for Pressure Sensors” and “Detailed Safety Instructions” for the handling of digital vacuum switch sensor.
7. Refer to “Common Safety Instructions for Mechanical Vacuum Sensor” for the handling of mechanical vacuum switch.
8. The material of plastic filter cover for VG, VK, VJ, VZ and VX series is PCTG. Avoid the adherence of Chemicals below to the products, and do not use them under those chemical environments.

● Table Chemical Name

Chemical Name
Thinner
Carbon tetrachloride
Chloroform
Acetate
Aniline
Cyclohexane
Trichloroethylene
Sulfuric acid
Lactic acid
Water soluble cutting oil (alkaline)

* There are more chemicals which should be avoided. Contact us for the use under chemical circumstance.

9. The material of plastic filter cover for VQ and VFU series is PA. Avoid the adherence of chemicals below to the products, and do not use them under those chemical environments.

● Table Chemical Name

Chemical Name
Methanol
Ethanol
Nitric acid
Sulfuric acid
Hydrochloric acid
Lactic acid
Acetone
Chloroform
Aniline
Trichloroethylene
Hydrogen peroxide

* There are more chemicals which should be avoided. Contact us for the use under chemical circumstance.

External Vacuum Controller **VIP** Series

Characteristics

- Built-in vacuum flow sensor model makes confirmation of suctioning a small work-piece possible. Best suitable for pick & place small work-pieces. Built-in pressure sensor type and without pressure sensor type are also available.
- Ultra small body (compared with other series in Pisco) realizes vacuum switchover with large flow. (8.5ℓ/min(ANR) or more at vacuum supply pressure : -80kPa)

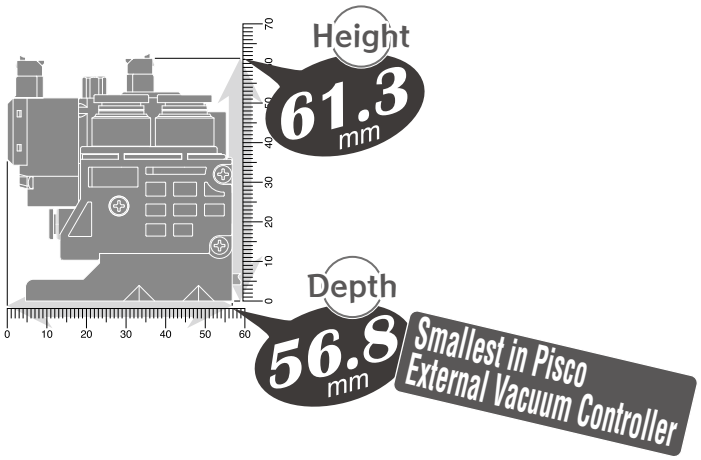

- 2 selections for blow-off air rate adjusting method; adjustable type with a needle, and fixed type.

Piping Example

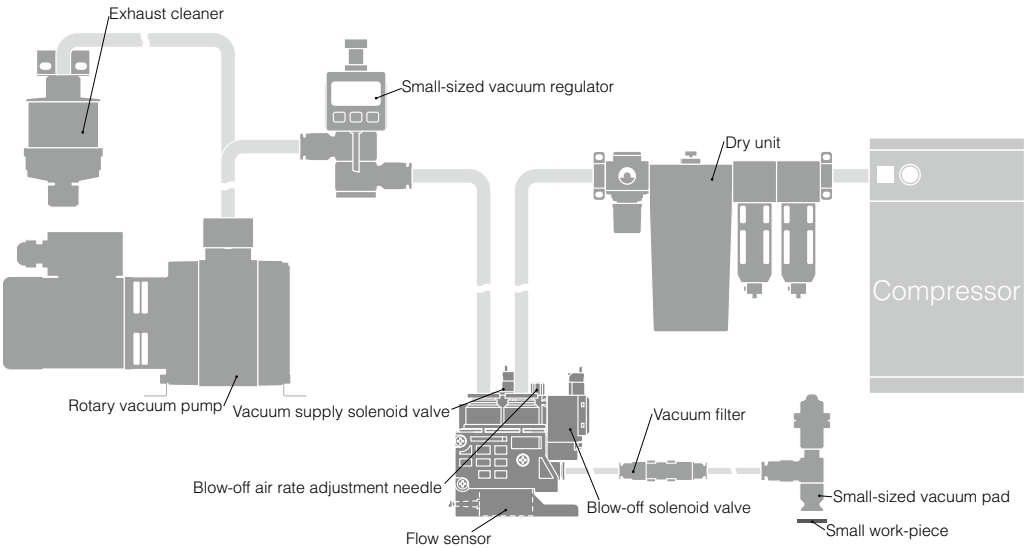

Specifications

Fluid medium		**Air** (JIS B 8392-1 : Compliant with [Class 1.2.1~2.4.3]), **Vacuum Air**
Operating pressure range		**43.5 ~ 102**psi (**0.3 ~ 0.7**MPa)
Operating vacuum range		**0 ~ -26.6**in Hg (**0 ~ -90**kPa)
Operating temp. range		**41 ~ 122**°F (**5 ~ 50**°C) (No freezing)
Operating humidity range		**35 ~ 85**%RH (No dew condensation)
Vibration resistance / shock resistance		Less than **50**m/s² / Less than **150**m/s²
Protective structure		IEC standard **IP40** equiv.
Lubrication		**No required**
Proof pressure	Air supply circuit	**152**psi (**1.05**MPa)
	Vacuum circuit	**29**psi (**0.2**MPa)

* Proof pressure shows the level of pressure at which the product would not be damaged. It is different from the operating pressure range, in which the product operates properly.

Solenoid Valve Specifications

Rated voltage	**24**VDC ± **10**%
Power consumption	**1.2**W (with LED)
Surge protection	**Varistor**
Operation indicator	**Current application: RED LED ON**
Manual operation	**Push-lock button**

Vacuum Supply Valve Specifications

Operation type		**Pilot valve**
Valve type		**Normally closed**
Vacuum supply air rate (*1, *2, *3, *4)		**0.35**SCFM (**10ℓ**/min(ANR)) (at vacuum supply pressure : **-23.6**in Hg. (**-80**kPa))
Response time (*5)	OFF → ON	**7** msec
	ON → OFF	**8.5** msec

*1 The value above applies when vacuum port size is ø4mm. The air flow rate decreases by 15% with ø3mm, and by 50% with ø1.8mm.
*2 The air flow rate decreases by 30% in case of the sensor code "-A □ 005" and "-A □ 010" with vacuum port size of ø4mm or ø3mm.
*3 Vacuum supply air flow rate varies according to the vacuum port dia. and tube length on vacuum side
*4 The air flow rate in SCFM is a reference value converted by multiplying l/min(ANR) by 0.035.
*5 The value at supply air: 0.5MPa with rated voltage (100%)

Blow-off Valve Specifications

Operation type		**Direct operation**
Valve type		**Normally closed**
Response time (*1, *2, *3)	OFF → ON	**3.5** msec
	ON → OFF	**2.5** msec

*1 The value above applies when vacuum port size is ø4mm. The air flow rate decreases by 15% with ø3mm, and by 50% with ø1.8mm.
*2 The air flow rate decreases by 30% in case of the sensor code "-A □ 005" and "-A □ 010" with vacuum port size of ø4mm or ø3mm.
*3 The value at supply air: 0.5MPa with rated voltage (100%)

Blow-off function

Blow-off air rate	**Without blow-off air rate adjustment needle**
	0.33SCFM (**9.5ℓ**/min(ANR)) or more (at supply pressure **72.5**psi (**0.5**MPa)
	With blow-off air rate adjustment needle
	0 ~ 0.33SCFM (**9.5ℓ**/min(ANR)) or more (at supply pressure **72.5**psi (**0.5**MPa)

* Blow-off air flow rate varies according to the vacuum port dia. and tube length on vacuum side.
* The air flow rate in SCFM is a reference value converted by multiplying l/min(ANR) by 0.035.

Pressure sensor without LED display Specifications

		-V1 (1 analog output)
Rated voltage		**10.8 ~ 30**VDC (Ripple voltage included)
Current consumption		**20**mA
Pressure detection		**Diffused semiconduction pressure sensor**
Pressure proof		**145**psi (**1.0**MPa)
Analog output	Pressure detection range	**0 ~ -29.5**in. Hg (**-100 ~ 0**kPa)
	Output voltage	**1 ~ 5**V
	Zero-point voltage	**1±0.04**V
	Span voltage	**4±0.04**V
	Output current	**1**mA max.
	Temperature characteristic	**±2**%F.S. max. (at Ta=**77**°F/**25**°C)
	Linearity	**±0.5**%F.S. max.
	Output impedance	**1**kΩ

* Allowable range of the variation of "Zero point voltage" and "Pressure setting value" caused by repeated voltage application is ±3%F.S.

Flow sensor Specifications

Rated voltage	**24**VDC **± 10%**
Current consumption	**30**mA max. (no-load)
Operating pressure range	**-26.6 ~ 59.1**in. Hg (**-90**kPa ~ **0.2**MPa)
Proof pressure	**43.5**psi (**0.3**MPa)
Analog output	**1 ~ 5**V (non-linear characteristic, connected load impedance **50**kΩ or more)
Pressure characteristic	**±10**%F.S. max. (at Ta=**77**°F/**25**°C)
Temperature characteristic	**±0.6**%F.S./°C max. (at Ta=**77**°F/**25**°C)
Accuracy of response	**±2**%F.S.max.
Response time	**5**m·sec max. (Sensor alone)
Output impedance	**1**kΩ

Model Designation (Example)

VIP	-	4	8	6	-	D24	-	N	-	AF050	-	M08
		(1)	(2)	(3)		(4)		(5)		(6)		(7)

(1) Vacuum (V) port size (Tube dia.)

	mm size (mm)		
Code	180	3	4
Tube dia. (mm)	ø1.8mm push-in fitting	ø3mm push-in fitting	ø4mm push-in fitting

(2) Vacuum supply (PV) port size (Tube dia.)

	mm size (mm)		
Code	4	6	8
Tube dia. (mm)	ø4mm push-in fitting	ø6mm push-in fitting	ø8mm push-in fitting

(3) Air supply (PS) port size (Tube dia.)

	mm size (mm)		
Code	4	6	8
Tube dia. (mm)	ø4mm push-in fitting	ø6mm push-in fitting	ø8mm push-in fitting

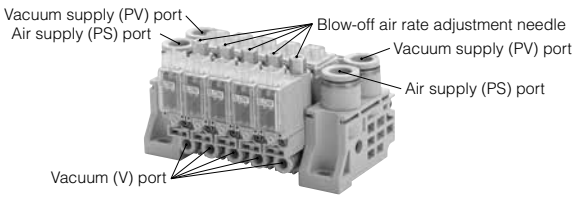

(4) Valve voltage

Code	D24
Voltage	24VDC

(5) Blow-off air rate adjustment needle

No code: Without needle
N: With needle

(6) Sensor

Code	Sensor specifications
No code	Without sensor
AF005	One direction flow sensor (Flow range: 0 ~ 0.02SCFM (0 ~ 0.5ℓ/min(ANR))
AF010	One direction flow sensor (Flow range: 0 ~ 0.04SCFM (0 ~ 1ℓ/min(ANR))
AF050	One direction flow sensor (Flow range: 0 ~ 0.18SCFM (0 ~ 5ℓ/min(ANR))
AF100	One direction flow sensor (Flow range: 0 ~ 0.35SCFM (0 ~ 10ℓ/min(ANR))
AR005	Bi-directional flow sensor (Flow range: ±0.02SCFM (±0.5ℓ/min(ANR))
AR010	Bi-directional flow sensor (Flow range: ±0.04SCFM (±1ℓ/min(ANR))
AR050	Bi-directional flow sensor (Flow range: ±0.18SCFM (±5ℓ/min(ANR))
AR100	Bi-directional flow sensor (Flow range: ±0.35SCFM (±10ℓ/min(ANR))
V1	Analog output pressure sensor

* The flow rate in SCFM is a reference value converted by multiplying ℓ/min [ANR] by 0.035.

(7) No. of stations

Code	M02	M03	M04	M05	M06	M07	M08	M09	M10
No. of stations	2	3	4	5	6	7	8	9	10

Detailed Safety Instructions

Before using the PISCO products, be sure to read the "Safety Instructions", "Common Safety Instructions for Products in This Catalog on page 13 to 16, "Common Safety Instructions for Vacuum Series on page 18, "Common Safety Instructions for Vacuum Generator Complex Types on page 31, and "Common Safety Instructions for External Vacuum Controllers on page 80.

⚠Warning : 1. Tighten threads with proper tightening torque. Improper tightening may cause an air leakage, a drop of the product or damage to components.

⚠Caution : 1. In selecting the piping to the supply (PS, PV) port or the vacuum (V) port, secure piping bore and length for enough effective sectional area. Insufficient effective sectional area may cause performance drop in characteristics such as suction flow and blow-off airflow.
2. This product is not equipped with a vacuum filter. Make sure to select and use PISCO vacuum filter. If the filter is not used, dust or other particles are accumulated inside the product and cause vacuum performance drop and solenoid valve malfunction such as air leakage. (Recommended filter: VFU series and VFJ series)

RoHS The products listed in this page are ECO-friendly products.
* Please refer to page 4 for the details of ECO-friendly products.

Without blow-off air rate adjustment needle

VIP Without sensor

Model code
VIP-①②③-D24-⑦

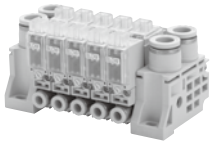

VIP With flow sensor

Model code
VIP-①②③-D24-AF005-⑦
VIP-①②③-D24-AF010-⑦
VIP-①②③-D24-AF050-⑦
VIP-①②③-D24-AF100-⑦
VIP-①②③-D24-AR005-⑦
VIP-①②③-D24-AR010-⑦
VIP-①②③-D24-AR050-⑦
VIP-①②③-D24-AR100-⑦

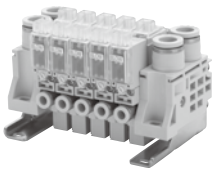

VIP With pressure sensor

Model code
VIP①②③-D24-V1-⑦

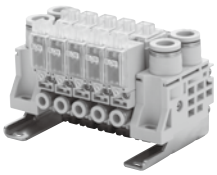

With blow-off air rate adjustment needle

VIP Without sensor

Model code
VIP-①②③-D24-N-⑦

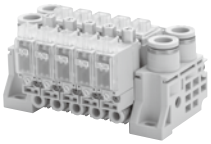

VIP With flow sensor

Model code
VIP-①②③-D24-N-AF005-⑦
VIP-①②③-D24-N-AF010-⑦
VIP-①②③-D24-N-AF050-⑦
VIP-①②③-D24-N-AF100-⑦
VIP-①②③-D24-N-AR005-⑦
VIP-①②③-D24-N-AR010-⑦
VIP-①②③-D24-N-AR050-⑦
VIP-①②③-D24-N-AR100-⑦

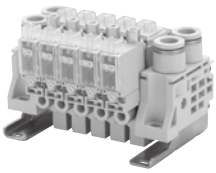

VIP With pressure sensor

Model code
VIP-①②③-D24-N-V1-⑦

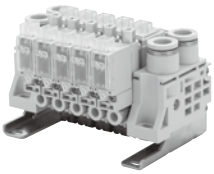

Caution
* ①: Replaced with vacuum port size code.
* ②: Replaced with vacuum supply port size code.
* ③: Replaced with air supply port size code
* ⑦: Replaced with no. of stations.
* Make-to-order production

Package specification
1 pc. in a bag

Replacement Filter Element

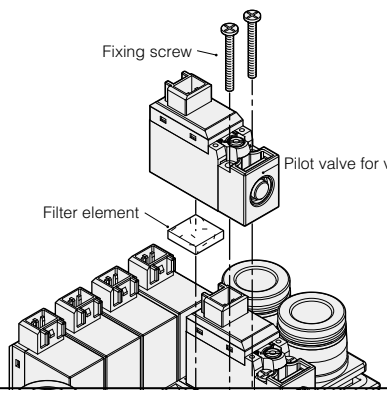

Filter element Model code
VN013B19

Package specification
10pcs. in a bag